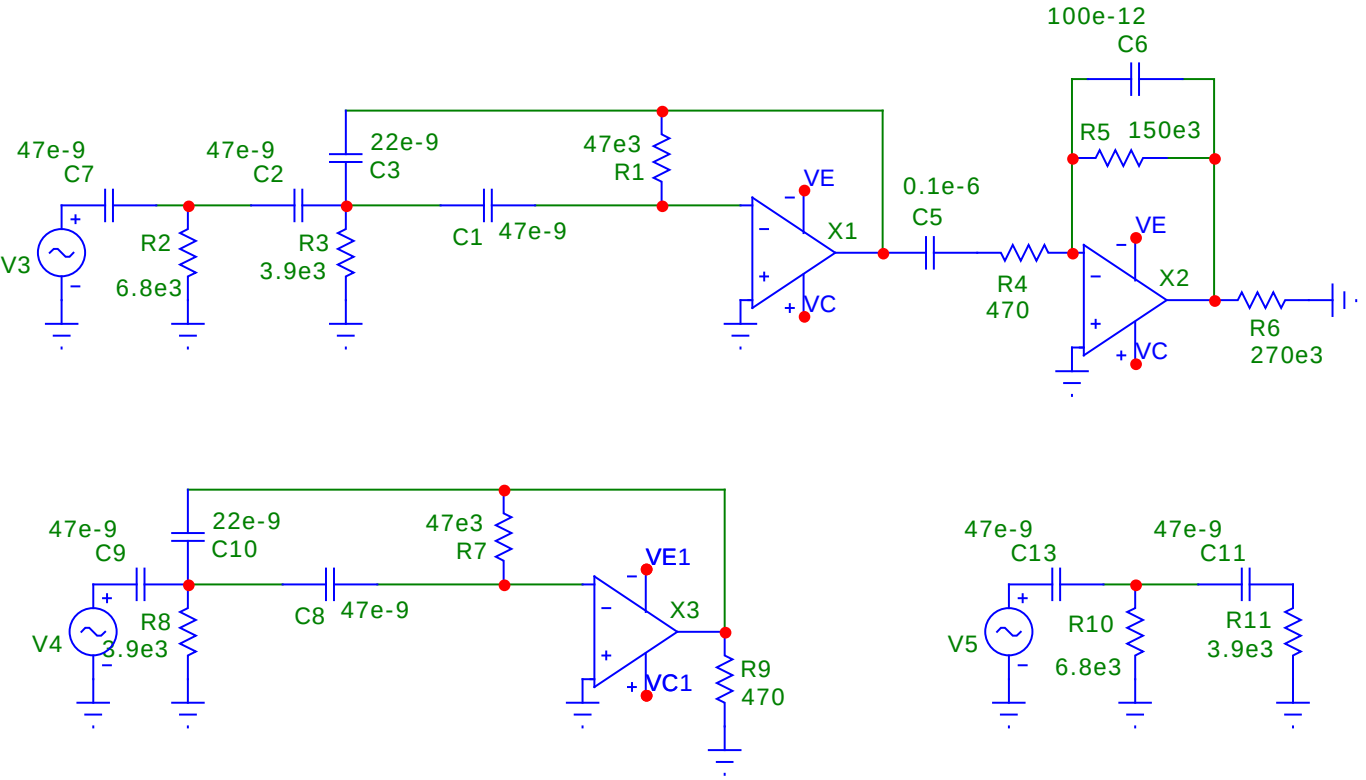
100e-12
C6
R5 150e3
47e-9
C7
47e-9
C2
22e-9
C3
47e3
R1
VE
0.1e-6
C5
V3
R2
6.8e3
R3
3.9e3
C1 47e-9
X1
VC
R4
470
VE
X2
VC
R6
270e3
47e-9
C9
22e-9
C10
47e3
R7
VE1
V4
R8
3.9e3
C8 47e-9
X3
VC1
R9
470
47e-9
C13
47e-9
C11
V5
R10
6.8e3
R11
3.9e3

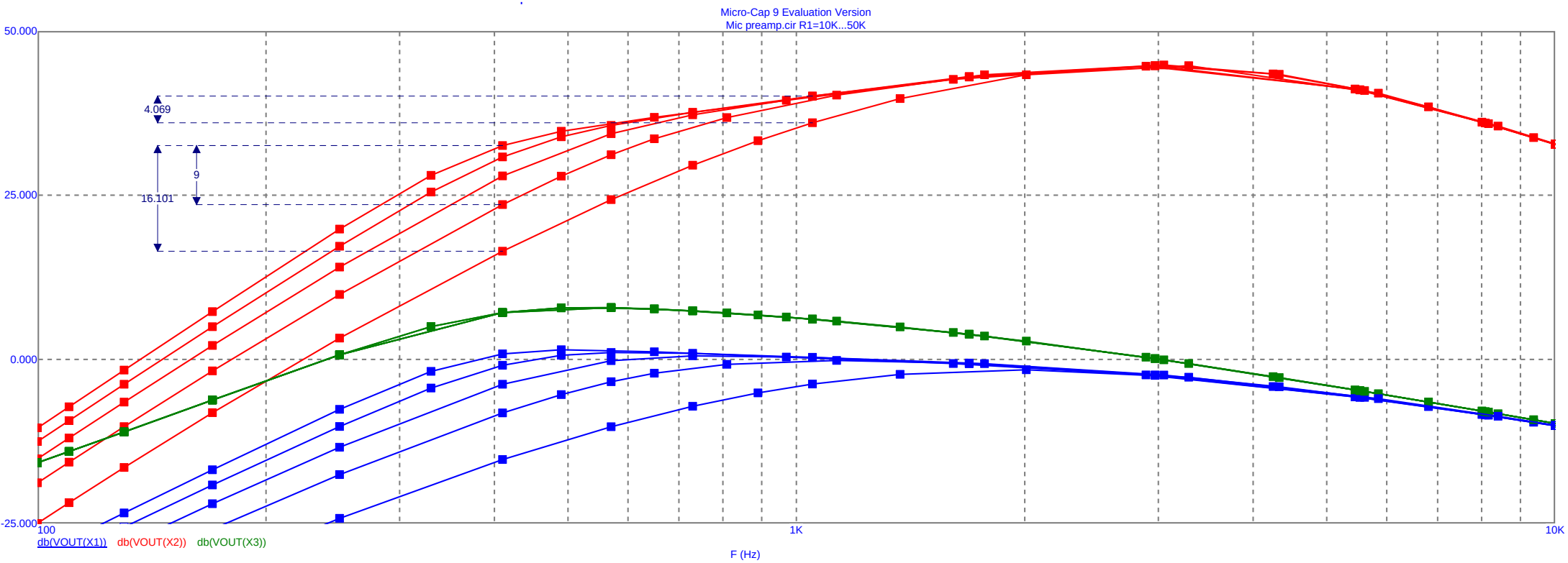
Micro-Cap 9 Evaluation Version
Mic preamp.cir R1=10K...50K
50.000
25.000
0.000
-25.000
4.069
9
16.101
100
1K
10K
db(VOUT(X1))
db(VOUT(X2))
db(VOUT(X3))
F (Hz)