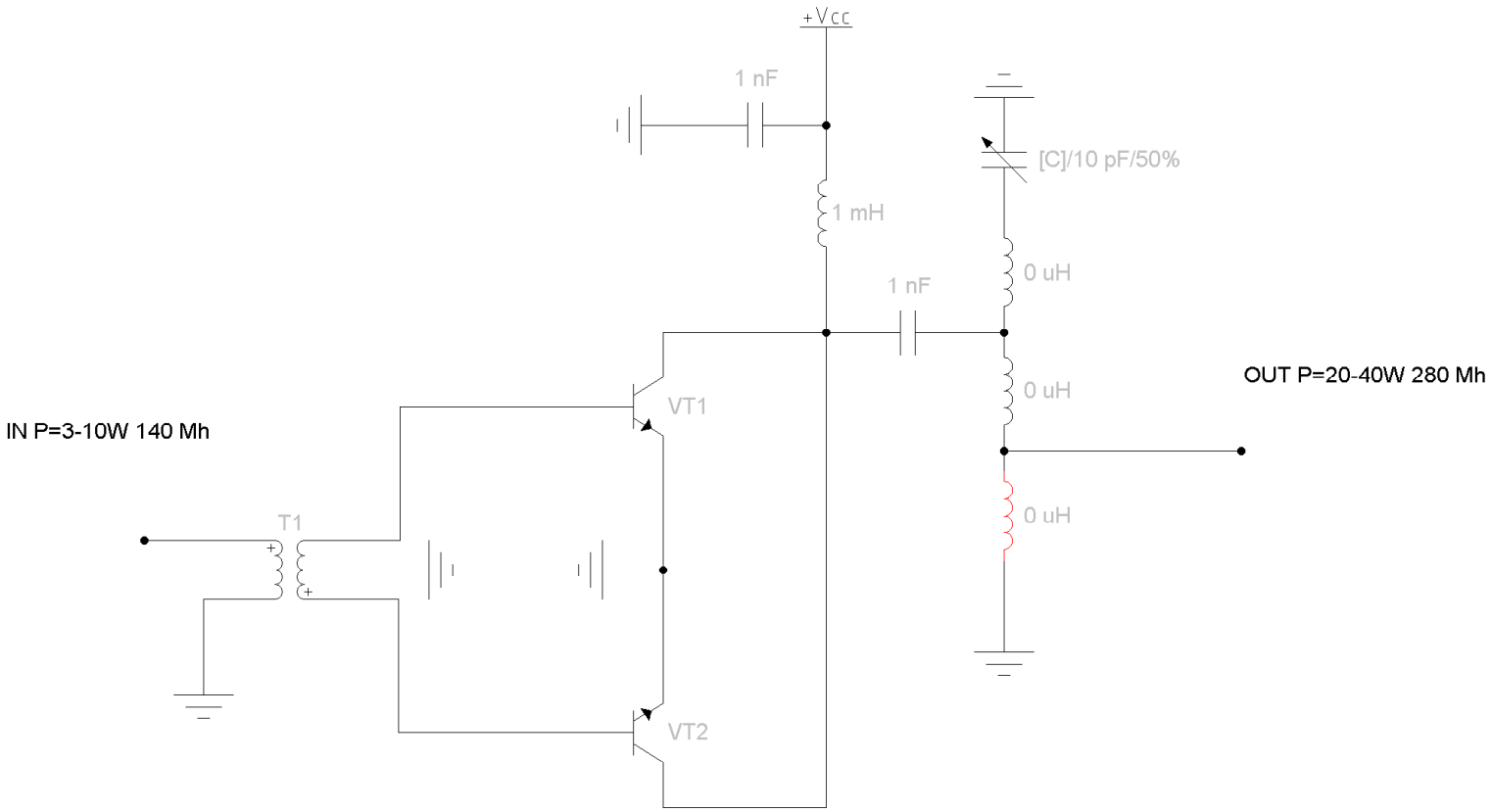
+Vcc
1 nF
[C]/10 pF/50%
1 mH
0 uH
1 nF
0 uH
OUT P=20-40W 280 Mh
VT1
IN P=3-10W 140 Mh
0 uH
T1
VT2