US005563615A

United States Patent [19]

Tay et al.

[11] Patent Number: 5,563,615

[45] Date of Patent: Oct. 8, 1996

[54] **BROADBAND END FED DIPOLE ANTENNA WITH A DOUBLE RESONANT TRANSFORMER**

[75] Inventors: **Yew S. Tay**, Plantation; **Danny O. McCoy**, Sunrise; **Quirino Balzano**, Plantation, all of Fla.

[73] Assignee: **Motorola, Inc.**, Schaumburg, Ill.

[21] Appl. No.: **416,542**

[22] Filed: **Apr. 3, 1995**

Related U.S. Application Data

[63] Continuation of Ser. No. 4,048, Jan. 15, 1993, abandoned.

[51] **Int. Cl.**[6] **H01Q 9/00**

[52] **U.S. Cl.** **343/749**; 343/791; 343/792

[58] **Field of Search** 343/749, 895, 343/745, 900, 790, 791, 792; H01Q 9/00

[56] **References Cited**

U.S. PATENT DOCUMENTS

2,802,210	8/1957	Berndt	343/792
3,588,903	6/1971	Hampton	343/792
4,117,493	9/1978	Altmayer	343/720
4,137,534	1/1979	Goodnight	343/752
4,180,819	1/1979	Nakano	343/792
4,494,122	1/1985	Garay et al.	343/722
4,540,989	9/1985	Day, Jr.	343/900
4,772,895	9/1988	Garay et al.	343/895
4,829,311	5/1989	Wells	343/749
4,940,989	7/1990	Austin	343/749
5,231,412	7/1993	Eberhardt et al.	343/895

Primary Examiner—Hoanganh T. Le

Attorney, Agent, or Firm—M. Mansour Ghomeshi; Juliana Agon

[57] **ABSTRACT**

An antenna comprises a feed port, a ½ wavelength radiator (**20**), and a double resonant transformer (**10**). The feed, port, having a signal feed portion (**34**) and a ground portion (**44**), is at a low impedance while the ½ wavelength radiator (**20**) has opposed high impedance ends (**21** and **22**). For transforming low impedance to high impedance, at two resonant frequencies, the double resonant transformer is coupled between the feed port and the ½ wavelength radiator.

10 Claims, 3 Drawing Sheets

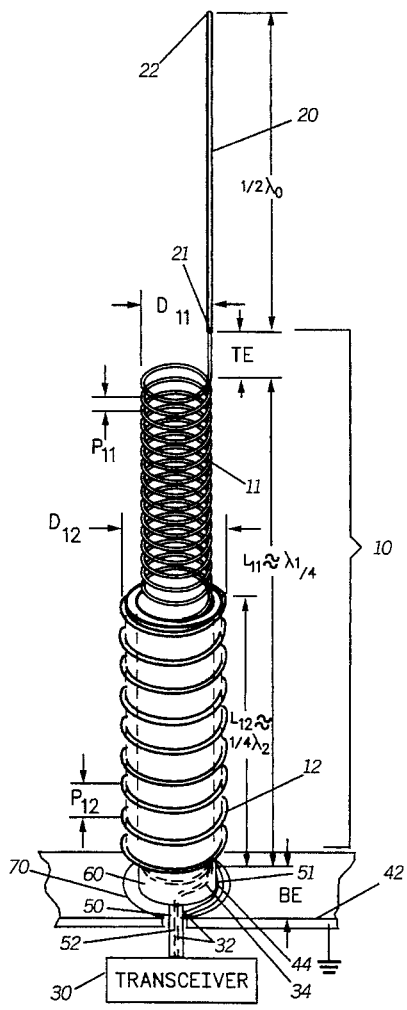

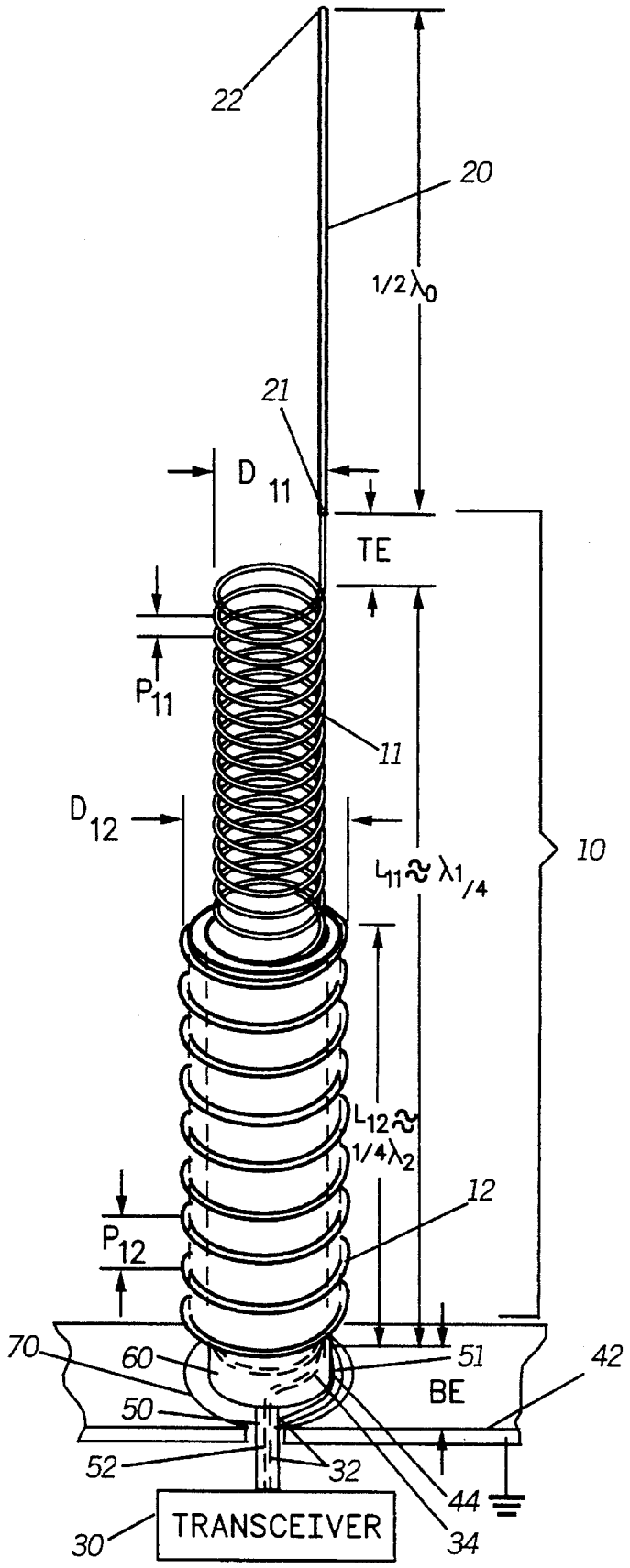
22
20
1/2λ0
21
D 11
TE
P11
11
D12
L11≈λ1/4
10
L12≈
1/4λ2
12
P12
70
60
51
42
BE
50
52
32
44
30
TRANSCEIVER
34

I .1

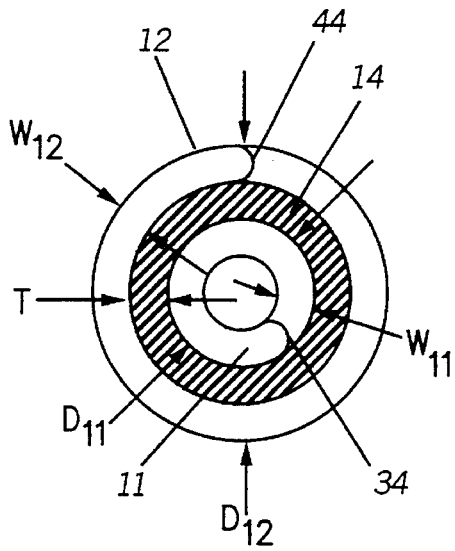
12
44
14
W12
T
W11
D11
11
34
D12

FIG.2

FIG. 3

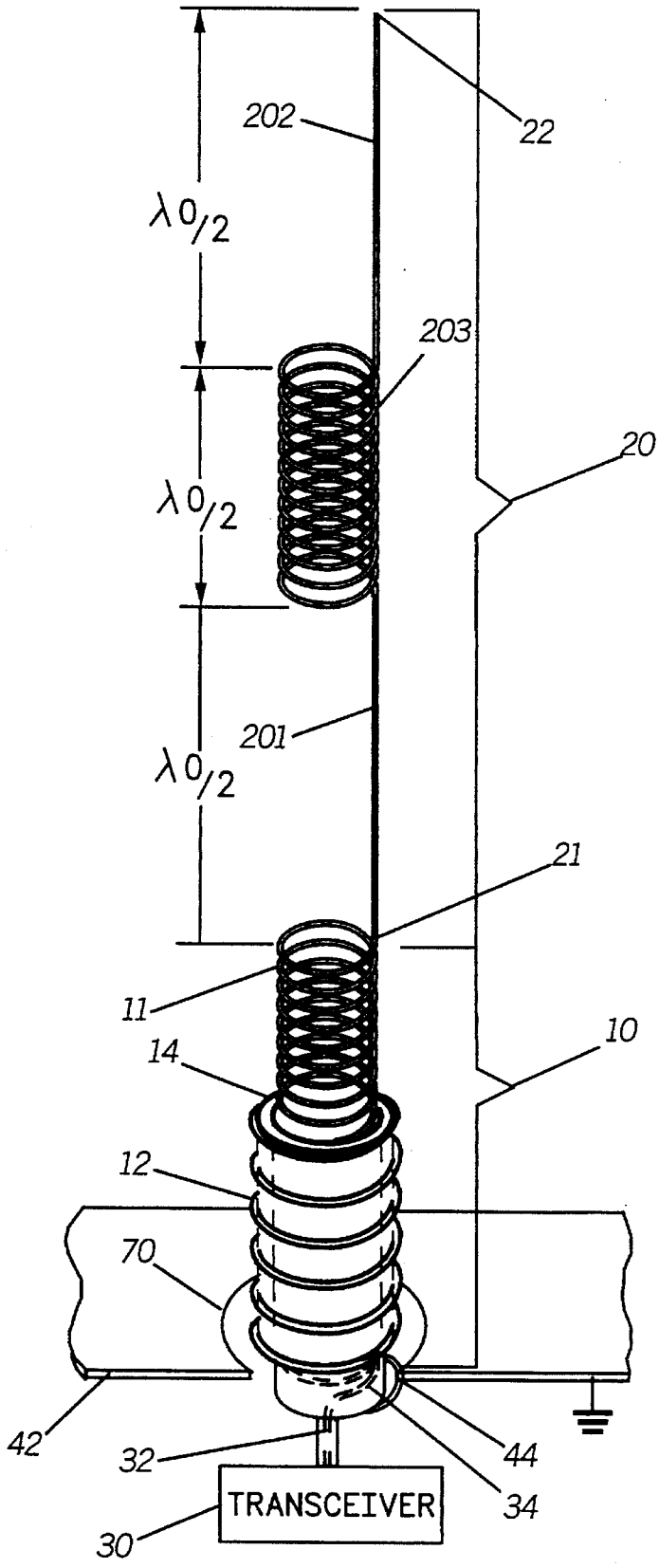
202
22
λ0/2
203
20
λ0/2
201
λ0/2
21
11
10
14
12
70
42
32
44
34
TRANSCEIVER
30

FIG. 4

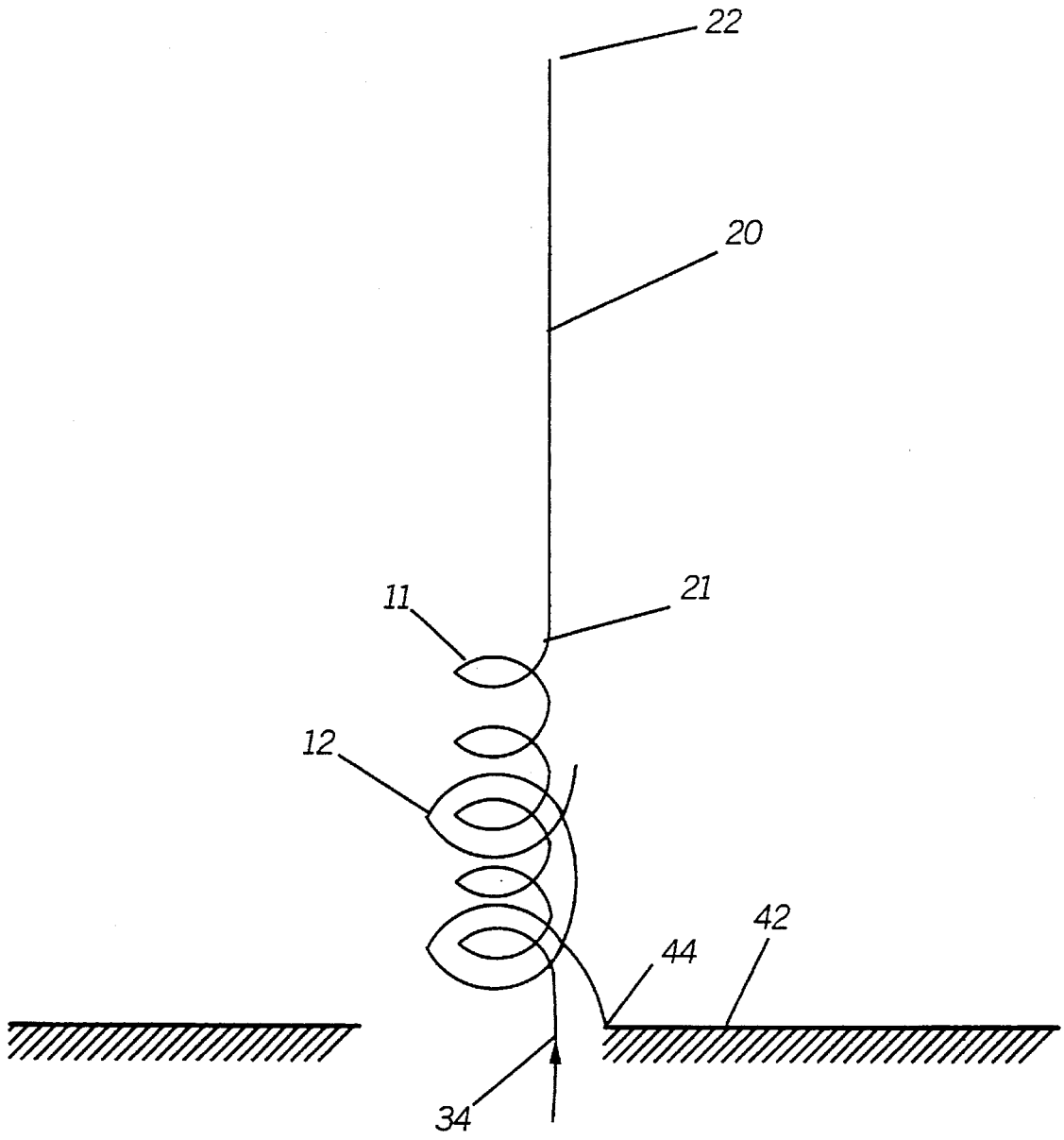

BROADBAND END FED DIPOLE ANTENNA WITH A DOUBLE RESONANT TRANSFORMER

This is a continuation of application Ser. No. 08/004,048, filed on Jan. 15, 1993 and now abandoned.

TECHNICAL FIELD

This invention relates generally to antennas, and more specifically to end-fed dipole antennas suitable to transmit or receive an information signal.

BACKGROUND

One fundamental antenna requirement for communication equipment, such as fixed or base station transceivers and mobile radios, is high radiation gain. To satisfy the gain requirement, a half-wave end-fed dipole with an impedance transformer, such as a quarterwave helix feed, is usually used as the antenna because a suitable ground plane, for a counterpoise, is provided in base stations and mobile radios. However, to cover the entire spectrum, for example, of the very high frequency (VHF) band of 136–174 MHz, four or five band splits of these dipole antennas, end fed by the quarterwave helix, tuned to different resonant frequencies, are needed. An equal number of band split antennas are necessary to cover the ultra high frequency (UHF) band of 403–512 MHz. Consequently, as factories strive to reduce inventories and unit costs, one single broadband antenna that could cover or operate across the entire band, at comparable radiation gain and size, would be very desirable and cost effective.

SUMMARY OF THE INVENTION

Briefly, according to the invention, an antenna comprises a feed port, a ½ wavelength radiator, and a double resonant transformer. The feed port, having a signal feed portion and a ground portion, is at a low impedance while the ½ wavelength radiator has opposed high impedance ends. For transforming the low impedance to high impedance, at frequencies between the two resonance, the double resonant transformer is coupled between the feed port and the ½ wavelength radiator.

In one aspect of the invention, the dipole radiator is approximately between ½ wavelength to ⅝ wavelength λ_o.

In another aspect of the invention, the double resonant transformer is a quarter wavelength λ_1 helix feed surrounded by an approximately ¼ wavelength λ_2 helix for broadbanding the dipole.

In a further aspect of the invention, the dipole radiator comprises a plurality of dipole elements separated by an 180 degree phase shifter, assembled collinearly.

BRIEF DESCRIPTION OF THE DRAWINGS

FIG. **1** is a representation of an end-fed dipole antenna in accordance with the present invention.

FIG. **2** is a bottom cross-sectional view of the transformer of FIG. **1**.

FIG. **3** is a representation of a collinear dipole array in accordance with the present invention.

FIG. **4** is a simplified representation of the antenna of FIG.

DETAILED DESCRIPTION OF THE PREFERRED EMBODIMENT

Referring to FIG. **1**, an antenna includes a double resonant transformer **10**, properly impedance matched, double resonantly tuned at two resonances, f**1** and f**2**, and an end-fed radiator **20**, such as a single dipole element in FIG. **1** or a collinear dipole array comprised of at least two dipole elements **201** and **202**, separated by an 180 degree phase shifter in the form of a halvewave helical coil **203** in FIG. **3**. At least one dipole element has to exist to form the radiator **20**, as shown in the form of a single straight wire radiator of FIG. **1**, but the plurality of dipoles **201** and **203** can also form the radiator **20** because they can be separated by the helically wound phase shifter **203**, as shown in FIG. **3**. The 180 degree phase shifter **203** suppresses energy that is opposite of the desired phase from the two dipole elements **201** and **202**. Apart from the form of the primary radiating element, there are no significant differences between FIG. **1** and FIG. **3**. Therefore, the discussion of FIGS. **1**,**2**, and **4** will relate also to FIG. **3**.

By design, the end-fed radiator or dipole **10** has opposed first or bottom (**21**) and second or top (**22**) high impedance ends. Preferably, the electrical length of the dipole **20** is approximately a half wavelength (0.5λo wherein λo=free-space wavelength at the design frequency) for resonating at an operating, fundamental, or design center frequency fo which may be the center of the band. However, an electrical length up to approximately ⅝ wavelength could also be used as the dipole radiator. The actual lengths implemented may vary from the ideal design to compensate for real world losses, manufacturability, etc. As shown, the dipole radiator **20** is arranged perpendicular to a ground plane **42**. Thus, the radiator **20** is a dipole with two opposed high impedance ends, at its fundamental frequency.

The first end **21** is closest to an aperture **70** in the ground plane **42** for providing a feed port, while the second end **22** remains an open circuit and free from electrical connections. The normally internal feed port connections are shown outside of the connector **60** for clearer illustration only. FIG. **4** shows a simplified electrical representation of the feed port at the bottom of the transformer **10**.

A radio frequency (RF) source, which may comprise an RF amplifier from a transceiver **30** or other communication device, generally matched to 50 ohms, provides a radio frequency (RF) signal **32** to the dipole radiator **20**. In order to efficiently excite the dipole **20**, having high impedance at either ends **21** and **22**, from the source (**30**) of low impedance (50 ohms), an effective impedance match from the source to the radiator is needed.

For proper matching and broadbanding, the double resonant transformer **10** is formed from two conductive inner and outer elements, concentrically assembled and separated by a spacer **14**, as seen in FIG. **2**. The two conductive elements are preferably cylindrically configured, such as sleeves or helical coils **11** and **12**. For practical implementations, the material of the helixes **11** and **12** is preferably made from standard AWG15 copper clad steel, commonly called music wire having a wire diameter (W) of 1.45 mm. Because the helixes **11** and **12** are in the form of helical coils, their physical lengths (L) are made substantially shorter than their natural resonant dimensions (λ/4).

To excite the dipole **20** which radiates (transmits) the RF signal **32**, one end of the first helix **11**, is coupled to the first end **21** of the dipole **20** while the other end is connected to the transceiver **30** via a signal feed portion **34** of the feed port. Conversely, to receive, an information signal is fed

from the dipole **20** to the first helix **11** which provides the received signal to the transceiver **30** (or optionally a receiver) for further processing.

The dipole ends **21** and **22** may be points or have minimal extended vertical lengths for facilitating connections. However, the first helix **11** need not physically contact the dipole **20**, at its first end **21**, but positioned sufficiently close such that RF energy is electromagnetically or capacitively coupled to the dipole **20** from the helix feed **11**.

For achieving a compromise between a suitable match or impedance transformation and a broader bandwidth, the first helix **11** has a first electrical length of approximately ¼ wavelength λ1 for resonating, by itself, at a first frequency or resonance f1 lower than the operating frequency fo. This quarter wavelength $\lambda_1/4$ is designed to be longer than the quarter wavelength $\lambda_0/4$, at the operating frequency f_o, to obtain a lower resonance f1 for assistance in broadbanding the operating bandwidth.

For broadbanding the end fed dipole **20**, the second helix **12** is concentrically assembled and wound for tight coupling with a portion of the first helix **11**. One end of the second helix **12** is shorted to a ground portion **44** of the feed port which is connected to the ground plane **42**. The other end of the second helix **12** is open and free from electrical connections.

In order to minimize the radiation by the transformer **10**, the physical length of each component of the transformer is made substantially shorter than its natural resonant dimension by helically coiling a wire in the form of helixes **11** and **12**. The electrical length $\lambda_2/4$ of the second helix **12**, is made substantially shorter than the electrical length $\lambda_1/4$ of the first helix **11**, approximately by a factor of 2, and much, much shorter than the $\lambda_o/4$ of the radiator **20** for providing a second resonance f2, higher than fo or f1. However, the electrical length is made sufficiently long enough to accomplish broadbanding by creating the second resonance close enough to the first resonance, such that a broader bandwidth with double peaks occur (when tightly coupled with the first helix **11**), instead of two disconnected resonant peaks. Hence, the two helixes **11** and **12** form two shortened monopoles, each with an electrical length of approximately one quarter of a wavelength $\lambda_1/4$ and $\lambda_2/4$ over the counterpoise (or ground plane **42**) for radiating by themselves at two different resonant frequencies f1 and f2.

Concentrically assembled, between the first and second conductive helixes **11** and **12**, is the spacer **14**, in the form of a cylindrical sleeve for maintaining concentricity and having a thickness and a dielectric constant, for electrically insulating the first and second conductive helixes **11** and **12**. Preferably, the dielectric material of the spacer **14** is Teflon™. Optionally, the inner and outer surfaces of the sleeve **14** may be threaded to fit the first and second or inner and outer helixes **11** and **12**.

The spacer **14** is sufficiently dimensioned, with the thickness being thin enough, at that dielectric constant, and with the first and second electrical lengths, pitches, and diameters of the first and second helixes **11** and **12**, such that the outer helix **12** is tightly coupled to the inner helix **11**. The tight coupling is necessary to efficiently broaden the frequency response of the impedance transformer **10**, for matching the ½ wavelength radiator, but minimizing radiation within, yet maximizing phase delays, in the double resonant transformer **10**. In other words, the lengths, pitches, and diameters of the helixes **11** and **12** and spacer **14** are designed for double resonance, minimal radiation, and proper phase delays.

It is noted that when the resonant frequency of the shortened monopoles **11** and **12** or dipole element **20** is discussed, we are referring to the resonant frequency of each element by itself in free space. That is, such resonance is determined by measuring the resonant frequency of the element prior to coupling to the other elements.

After tightly coupling the outer helix **12** to the inner helix **11** in the region of the feedpoint (**21**), two different frequencies, shifted closer to f_o, than f1 and f2 were to f_o, result from the coupled structure. One resultant frequency, slightly shifted lower from f2, but is still higher than the resonant frequency f0 of the dipole radiating element **20** while the second resultant frequency, slightly shifted higher from f1, is still lower than the resonant frequency f_o. Hence, if the resonant frequency of the inner helix (f_1) is less than that of the outer helix (f2), then an increased bandwidth results. Since it is well-known that wavelength varies inversely with frequency, the higher resultant frequency equates to a shorter wavelength. In effect, the length of the monopole **11** has been reduced on the coupled structure to result in an increase or shift in resonant frequency f1. On the other hand, the length of the shortened monopole **12** is effectively increased for the tightly coupled structure to result in a second resonant frequency shifted lowered than the resonant frequency f2 of the monopole **12** alone.

In order to achieve an antenna with the desired resonant center operating frequency f_o and radiation bandwidth, the proper f_o, f1, f2 (frequency determined by length, etc.), and spacing, or coupling, between the two helixes **11** and **12** need to be chosen. This magnitude of coupling between the first helix **11** and the second helix **12** (if the second helix **12** is touching the spacer **14**) is a function of the thickness, length, and dielectric constant of the spacer **14** and the pitch, lengths, and diameters of the helixes **11** and **12**.

The dimensions of the antenna will, of course, vary depending upon the operating frequency of interest in any particular implementation. However, for the single VHF band mobile radio antenna, built in accordance with the teachings of FIGS. **1** and **2**, approximate dimensions are listed in Table 1 for an operating frequency of interest in the approximately middle of the VHF band.

TABLE 1

Dimension	Helix 11	Helix 12	Spacer 14
body length (L)	89 mm	53 mm	89 mm
top end length (TE)	2 mm		
bottom end length (BE)	1.5 mm	1.5 mm	
thickness (T)			4.7 mm
outside diameter (D)	12.2 mm	25 mm	21.6 mm
pitch (P)	3.54 mm	9.78 mm	
number of turns	25⅛	5⁵⁄₁₂	

For the single UHF band mobile radio antenna, built in accordance with the teachings of FIG. **3**, approximate dimensions are listed in Table 2 for an operating frequency of interest in the approximately middle of the UHF band.

TABLE 2

Dimension	Helix 11	Helix 12	Spacer 14
body length (L)	45 mm	30 mm	30 mm
bottom end length (BE)		4 mm	
thickness (T)			3.4 mm
wire diameter (W)	1.53 mm	1.53 mm	
outside diameter (D)	13.77 mm	24 mm	21.1 mm
pitch (P)	11.25 mm	19.2 mm	
number of turns	4	1⁹⁄₁₆	

The spacing desired between the two helixes **11** and **12** is determined by the difference in diameters between them.

The ratio of the second helix's diameter over the first helix's diameter is not designed to be the same as the ratio of the diameter of the outer ground conductor **51** of a transmission feed line **50**, for providing the RF signal **32**, over the diameter of the inner conductor **52** of the transmission line **50**. With this transmission line **50** terminated by a standard small SMA 50 ohm coaxial connector **60**, the feedpoint at the feed port, is extended up the transformer **10** to the dipole end **21**, even though the transmission line impedance would be different from the transformer's impedance (due to the differences in diameter ratios between the two) because the transformer **10** is at ¼ wavelength. Thus, on transmission, the antenna accepts the energy from the guided wave of the transmission line and radiates it into space. Conversely, on reception, the antenna gathers energy from an incident wave and couples it down the transmission line.

As a result of adding a shorter outer helix around an antenna formed by a dipole fed by a quarter wavelength helix feed, the original antenna's bandwidth is increased without compromising its radiation performance. Of course, this broadbanding of the end fed dipole antenna with a double resonant transformer may be applied to other frequencies and bands to minimize band-splits.

What is claimed is:

1. A broadband antenna, comprising:

a feed port including a signal feed portion and a ground portion and having a low impedance;

an approximately ½ wavelength radiator having opposed high impedance ends;

fixed double resonant broadband transforming means for transforming said low impedance to said high impedance over a wide range of frequencies without tuning, said transforming means coupled between said feed port and said approximately ½ wavelength radiator, the broadband transforming means including;

a first conductive means for resonating at a first frequency, said first conductive means having first and second ends, said first end connected to said signal feed portion of said feed port and said second end coupled to said first end of said ½ wavelength radiator; and

a second conductive means shorter in length than the first conductive means for resonating at a second frequency, said second conductive means having first and second ends, said second conductive means concentrically positioned around a portion of said first conductive means, said first end shorted to said ground portion of said feed port and said second end being open and free from electrical connections.

2. The antenna of claim **1**, wherein said double resonant transforming means further comprises spacer means, concentrically positioned between said first and second conductive means, for electrically insulating said first and second conductive means, said spacer means being sufficiently thin such that said first conductive means is tightly coupled to said second conductive means so as to broadband the frequency response exhibited by said ½ wavelength radiator.

3. The antenna of claim **1**, wherein said ½ wavelength radiator comprises an end-fed dipole.

4. An antenna assembly, comprising:

a feed port including a signal feed portion and a ground portion, said ground portion connected to a ground plane;

an approximately ½ wavelength dipole radiator having first and second high impedance ends;

a first fixed conductive helix having first and second ends, a first diameter, and exhibiting a first pitch and a first electrical length, said first end coupled to said signal feed portion of said feed port for receiving a radio frequency signal and said second end connected to said first high impedance end of said ½ wavelength radiator;

a second fixed conductive helix shorter in length than the first fixed conductive helix and having first and second ends, a second diameter, and exhibiting a second pitch and a second electrical length, said second conductive helix concentrically wound around a portion of said first conductive helix to form a fixed broadband double resonant transformer which accomplishes broadband performance without tuning, said first end shorted to said ground portion of said feed port and said second end being open and free from electrical connections; and

spacer means having a thickness and a dielectric constant, concentrically situated between said first and second conductive helixes, for electrically insulating said first and second conductive helixes, said spacer means being sufficiently dimensioned, in said thickness being thin enough, at said dielectric constant, and with said first and second electrical lengths, pitches, and diameters of said first and second helixes, such that said first helix is tightly coupled to said second helix, so as to efficiently broaden the frequency response exhibited by said ½ wavelength radiator by minimizing radiation and maximizing phase delays in said double resonant transformer.

5. A communication device, comprising:

a transceiver for providing a radio frequency signal; and an antenna comprising:

a feed port including a signal feed portion and a ground portion;

a dipole radiator having an electrical length approximately between ½ wavelength λ_o and ⅝ wavelength λ_o and having first and second high impedance ends;

a first fixed conductive helix having first and second ends, a first diameter, and exhibiting a first pitch and a first electrical length of approximately ¼ wavelength λ_1, said first end coupled to said signal feed portion of said feed port for receiving said radio frequency signal and said second end connected to said first high impedance end of said radiator; and

a second fixed conductive helix shorter in length than the first fixed conductive helix and having first and second ends, a second diameter, and exhibiting a second pitch and a second electrical length of approximately ¼ wavelength λ_2, said second conductive helix concentrically wound, around a portion of said first conductive helix to form a fixed and broadband double resonant transformer which provides broadband coupling without tuning, said first end shorted to said ground portion of said feed port and said second end being open and free from electrical connections.

6. The communication device of claim **5**, further comprising:

a transmission feed line having inner and outer conductors for coupling said transceiver to said antenna; and

a coaxial connector terminating said transmission feed line at the upper terminus of the inner and outer conductors, wherein the feed port is located at the upper terminus of said coaxial connector.

7. The communication device of claim **5**, wherein said second end of said ½ wavelength radiator being open and free from electrical connections.

8. The communication device of claim **5**, wherein said radiator comprises a plurality of dipole elements separated by an 180 degree phase shifter.

9. The communication device of claim **5**, wherein said second electrical length $\lambda_2/4$ of said second helix is substantially shorter than said first electrical length $\lambda_1/4$ of said first helix by approximately a factor of 2.

10. The communication device of claim **5**, wherein said first electrical length $\lambda_1/4$ of said first helix is longer than a $\lambda_0/4$ of said radiator.

* * * * *