United States Patent

[11] 3,618,107

[72] Inventor William M. Spanos
Wayne, N.J.

[21] Appl. No. 17,652
[22] Filed Mar. 9, 1970
[45] Patented Nov. 2, 1971
[73] Assignee International Telephone and Telegraph Corporation
Nutley, N.J.

[54] BROADBAND DISCONE ANTENNA HAVING AUXILIARY CONE
10 Claims, 10 Drawing Figs.

[52] U.S. Cl. 343/773, 343/790, 343/846
[51] Int. Cl. H01q 13/00
[50] Field of Search 343/773, 774, 790, 791, 846

[56] References Cited
FOREIGN PATENTS

821,374	11/1951	Germany	343/790
1,130,868	6/1962	Germany	343/790

Primary Examiner—Eli Lieberman
Attorneys—C. Cornell Remsen, Jr., Walter J. Baum, Paul W. Hemminger, Charles L. Johnson, Jr., Philip M. Bolton, Isidore Togut, Edward Goldberg and Menotti J. Lombardi, Jr.

ABSTRACT: A broadband discone antenna arrangement for improving the elevation pattern of the basic discone antenna at frequencies many times the antenna cutoff frequency. An auxiliary conical element is added to the basic discone arrangement coaxially positioned between the main cone and the disc element. The inner surface of the outer conductor of the coaxial transmission feed line, which line passes through the main cone, is continuous with the outer surface of the auxiliary cone at its apex; while the outer surface of the coaxial line's outer conductor is continuous with the inner surface of the main cone. The auxiliary cone slant height is chosen just above cutoff at the frequency where pattern improvement is desired. The flair angle of the auxiliary cone is chosen greater than 60° while the main cone flair angle is less than 60° in order to minimize antenna size and optimize the pattern at the higher frequencies.

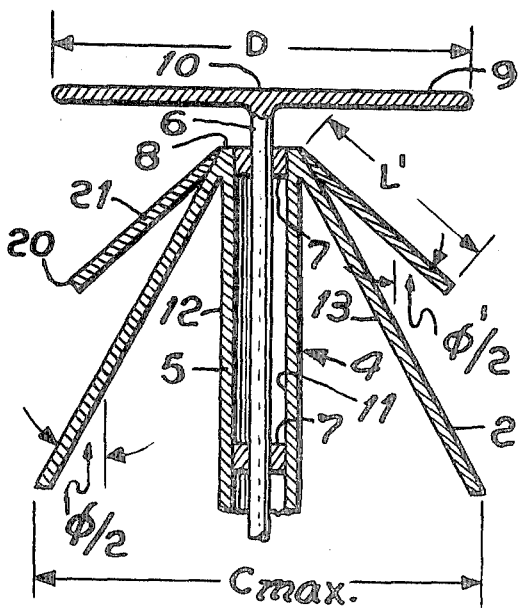

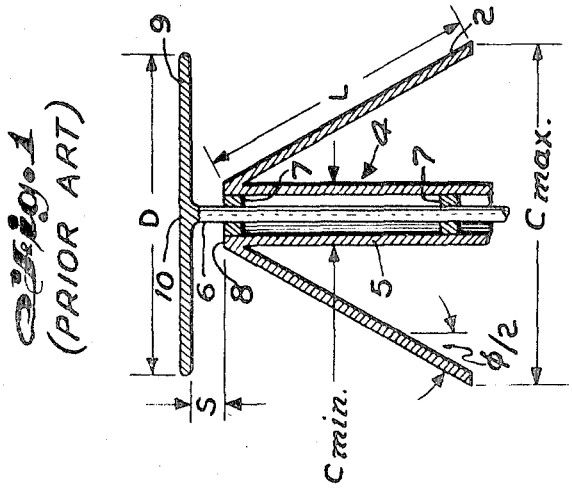

Fig. 1
(PRIOR ART)

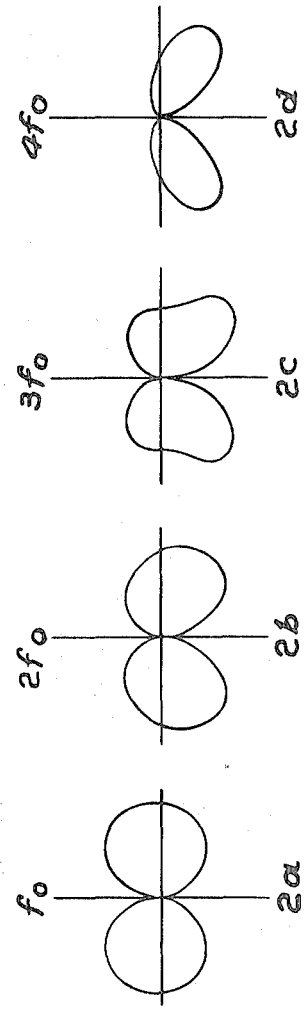

Fig. 2
(PRIOR ART)

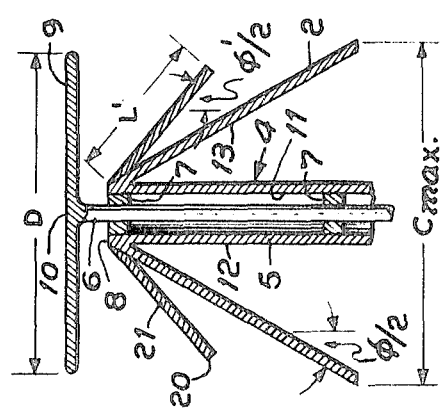

Fig. 3

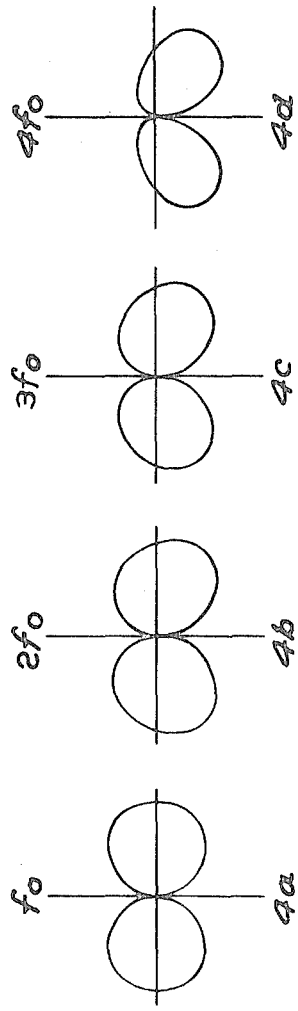

Fig. 4

INVENTOR
WILLIAM M. SPANOS
BY Mark L. Hopkins
AGENT

BROADBAND DISCONE ANTENNA HAVING AUXILIARY CONE

BACKGROUND OF THE INVENTION

This invention relates to broadband antennas and in particular to discone antenna arrangements.

The basic discone is a two-element antenna, one element being a cone and the other a substantially flat surface, preferably disc-shaped, situated atop the cone at its apex. The antenna is fed by a coaxial transmission line which passes through the cone and connects therewith via the outer conductor at the cone's apex, the inner conductor of the feed line being connected to the disc. Such a discone antenna arrangement is disclosed in U.S. Pat. No. 2,368,663 issued Feb. 6, 1945 to A. G. Kandoian, the disclosure of which patent is incorporated herein by reference.

While it is known that the discone antenna is an omnidirectional radiator which covers an extremely wide bandwidth with an acceptable standing wave ratio (SWR), an upper frequency limit is reached, however, in which the elevation pattern becomes poor, tilting toward the cone and narrowing. At this frequency, which is many times the lowest frequency of operation, the cone portion of the discone radiator has become very long in terms of wavelength. Conduction occurs along the cone toward the coaxial feed line which increases with a corresponding further frequency increase. This conduction has the effect of pulling the pattern toward the feed line, with pattern distortion corresponding by increasing with the further rise in frequency.

SUMMARY OF THE INVENTION

It is therefore an object of this invention to improve the radiation pattern of the discone antenna over a broadband of frequencies while maintaining an acceptable SWR.

It is a further object of this invention to provide a discone antenna with improved radiation pattern generation which contains the advantages of the basic discone arrangement such as simplicity of construction and feeding, great rigidity and small size.

The improved pattern is realized in the discone antenna arrangement according to the invention by the inclusion of an auxiliary conical element or cone in the basic discone arrangement, coaxially mounted with respect to the axis of the first conical element (main cone) and the center of the disc element, and situated therebetween. The inner surface of the outer conductor of the coaxial transmission feed line is connected to and forms a continuous conductive surface with the auxiliary cone.

BRIEF DESCRIPTION OF THE DRAWING

The above-mentioned and other objects and features of the invention will become more apparent and the invention itself will be best understood by referring to the following description when taken in conjunction with the accompanying drawing, in which:

FIG. 1 schematically illustrates the basic discone antenna arrangement, according to the prior art, in cross-sectional view;

FIGS. 2*a–d* form a four-part graphical representation of the elevation pattern of the discone antenna of FIG. 1 as a function of frequency;

FIG. 3 schematically illustrates in cross-sectional view the discone antenna arrangement according to the invention; and

FIGS. 4*a–d* form a four-part graphical representation of the elevation pattern of the antenna arrangement of FIG. 3 as a function of frequency.

DESCRIPTION OF THE PREFERRED EMBODIMENT

The discone antenna is intended primarily for vertical polarization and gives an omnidirectional pattern in the horizontal plane. Optimization of the discone, that is achieving the best impedance match over the largest frequency range, while maintaining a minimum antenna size and cross-sectional area, involves the manipulation of several parameters, which parameters are indicated in FIGS. 1 and 3 by letter designations. The cone slant height L for instance is a function of frequency, and its length is usually chosen to be slightly greater than a quarter wavelength of the lowest frequency of operation intended. Also, frequency coverage for the desired pattern is dependent on the cone flair angle Φ. For a better understanding of the selection of parameter dimensions of the basic discone antenna and their effects on discone performance, see "Designing Discone Antennas" by J. J. Nail, Electronics, Aug. 1953.

Referring to FIG. 1, the basic discone antenna is shown according to prior art. Conical element 2 is shown mounted on a coaxial transmission feed line indicated generally at 4. The outer conductor 5 of transmission line 4 is connected to and forms a continuous conducting surface with the conical element 2 at the apex thereof. The inner conductor 6 of transmission line 4, shown rigidly positioned with respect to the outer conductor 5 and cone 2 by insulating spacers 7, extends above the apex of the cone 2 a discreet distance S and is connected to disc element 9 at the center thereof.

Illustrated in FIGS. 2*a–d* is a series of radiation patterns of the discone antenna of FIG. 1 at various multiples of f_0 (the cutoff frequency of the antenna). The pattern is omnidirectional in the H-plane; however, the E-plane pattern or field, as shown, varies with frequency. The E-plane field most closely approximates that of a dipole at frequencies near f_0. However, as the operating frequency is increased, the E-plane pattern tends to push downward away from the plane containing the disc element 9, resulting in a loss of gain on the horizon. This begins to occur, as stated hereinbefore, at frequencies several times the lowest frequency of operation, at which frequencies the cone element 2 (in particular, the cone-height L) becomes long in terms of wavelength. Thus at frequencies $3f_0$ or $4f_0$, the pattern is decidedly narrowed and tilted towards the cone.

FIG. 3 illustrates the discone antenna arrangement according to the invention, which arrangement greatly improves the E-plane pattern at frequencies several times f_0. The various parts of the antenna of FIG. 1 are given the same reference designations in FIG. 3 to facilitate easy cross-reference This is accomplished by adding to the basic discone antenna an auxiliary conical element or cone 20, coaxially mounted between the disc element 9 and the main cone 2. According to the inventive arrangement, the inner surface 11 of the outer conductor 5 of transmission line 4 is connected to and forms a continuous conductive surface with the outer surface 21 of auxiliary conical element 20 at the apex thereof, which connection holds the auxiliary cone 20 rigidly in place. As shown, the center conductor 6, via its extended portion reaching to the disc element 9, passes through the auxiliary cone 20 at its apex 8. The outer surface 12 of the outer conductor 5, on the other hand, in its connection to the main cone 2, forms a continuous conductive surface with the main cone's inner surface 13 at its apex 8. Thus the apexes of the respective cones are substantially coincident, and the respective base portions of the two cones are positioned on the same side of the substantially coincident apexes.

The length L′ of the auxiliary cone 20 is chosen to be just above cutoff at the frequency where pattern improvement is desired, and is, as a result, less than L of the main cone. The flair angle Φ for the main cone 2 and Φ' of the auxiliary cone 20 are selected to optimize the frequency coverage for the pattern. Since the cone slant height L of the main cone 2 is chosen to correspond with the range of desired frequency operation, and may therefore be considered fixed, a change in the flair angle Φ thereof creates a change directly proportional thereto in the maximum cone diameter C_{max}. In as much as the diameter D of the disc element 9 is optimumly related to C_{max} by the formula

$D \approx 0.7C_{max}$, a smaller C_{max} would result in a corresponding smaller disc diameter D. From experiment it has been shown

that by making the disc element **9** as small as possible, the tilting of the pattern away from the disc at the higher frequency is significantly reduced. Thus the flair angle Φ of the main cone **2** is best chosen smaller than 60° to allow the disc size to be reduced and aid substantially the improvement of the pattern at higher frequencies. The auxiliary cone flair angle Φ′ is, on the other hand, chosen greater than 60° to optimize the pattern for frequencies above the cutoff frequency of the auxiliary cone. FIGS. 4*a–d* show the patterns generated by the antenna arrangement according to the invention to be a vast improvement at the higher frequencies (three or four times f_0) over the patterns illustrated in FIGS. 2*a–d*.

The addition of the auxiliary cone **20** to the basic discone antenna arrangement acts as an interruption to the long-wire effect of the main cone slant height L at the higher frequencies, and directs the pattern to emit from between the two cones with the main cone helping prevent the conduction towards the feed line which causes the pattern to be pulled downward.

While the principles of this invention have been described in connection with specific apparatus, it is to be clearly understood that this description is made only by way of example and not as a limitation to the scope of the invention as set forth in the objects and features thereof and in the accompanying claims.

What is claimed is:

1. An improved broadband discone antenna arrangement of the type having a conical first antenna element connected at its apex to the outer conductor of a coaxial transmission line passing therethrough and a substantially flat disc-shaped second antenna element positioned adjacent the apex of the conical element and connected to the center conductor of the transmission line and supported thereby, wherein the improvement comprises an auxiliary conical antenna element coaxially positioned between said first conical element and said disc element, said auxiliary conical element being connected at its apex to the outer conductor of said transmission line and supported thereby.

2. The antenna arrangement according to claim **1** wherein the dimension of the slant height of said auxiliary conical element is less than that of said first conical element and is selected in dependence on the minimum frequency of operation at which antenna radiation pattern improvement is desired.

3. The antenna arrangement of claim **1** wherein the flair angle of said auxiliary conical element is larger than that of said first conical element.

4. The antenna arrangement of claim **3** wherein the flair angle of said first conical element is less than 60° and the flair angle of said auxiliary conical element is greater than 60°.

5. The antenna arrangement of claim **1** wherein the inner surface of the outer conductor of said transmission line is continuous with the outer surface of said auxiliary conical element, and the outer surface of said outer conductor is continuous with the inner surface of said conical first antenna element.

6. A broadband discone arrangement comprising:

a. a first substantially conical antenna element;

b. a substantially disc-shaped antenna element positioned adjacent the apex of said first conical element;

c. a coaxial transmission line passing through said first conical element, the inner conductor of said transmission line passing through the apex of said first conical element, and insulated therefrom, to be connected to substantially the center of said disc-shaped element, the outer conductor of said transmission line being connected to said first conical element at the apex thereof; and

d. an auxiliary conical antenna element coaxially positioned between said disc-shaped element and said first conical element, said auxiliary conical element being connected at its apex to the outer conductor of said transmission line and substantially coincident with the apex of said first conical element, the base of said auxiliary conical element and the base of said first conical element being positioned on the same side of the substantially coincident apexes.

7. The antenna arrangement according to claim **6** wherein the dimension of the slant height of said auxiliary conical element is less than that of said first conical element and is selected in dependence on the minimum frequency of operation at which antenna radiation pattern improvement is desired.

8. The antenna arrangement according to claim **7** wherein the dimension of the slant height of said auxiliary conical element is less than that of said first conical element and is selected in dependence on the minimum frequency of operation at which antenna radiation pattern improvement is desired.

9. The antenna arrangement according to claim **8** wherein the dimension of the slant height of said auxiliary conical element is less than that of said first conical element and is selected in dependence on the minimum frequency of operation at which antenna radiation pattern improvement is desired.

10. The antenna arrangement of claim **9** wherein the inner surface of the outer conductor of said transmission line is continuous with the outer surface of said auxiliary conical element, and the outer surface of said outer conductor is continuous with the inner surface of said conical first antenna element.

* * * * *