DR-108 Dealer Manual Service Manual

VHF

* SPECIFICATIONS

GENERAL

Frequency	DR108TE1 135.000 ~ 155.000MHz DR108TE2 150.000 ~ 173.995MHz
Step	5 , 10 , 12.5 , 15 , 20 , 25 KHz selectable
Channel	20ch
Modulation	F3E (FM)
Antenna impedance	50 ohm unbalanced
Power supply	13.8V DC +/- 10%
Current	Tx high.approxl 9A Rx squelched.less than 800mA
Dimensions	140(W) x 40(H) x 154(D)
Weight	approx 0.9kgs

Transmitter

Power output	25W tcontinuously adjustable to 5W
Modulation	variable reactance frequency modulation
Max deviation	+/- 2.5kHz or +/- 5.0kHz dealer setting
Spurious	-75dB or under below carrier
Residual Noise	-40dB
Microphone	Electret Condenser Microphone
Operatin Mode	Simplex/Semi-Duplex
Offset	0 to +/-15.995MHz freely programmable

Receiver

Receiver sys	Double-conversion superheterodyne
Sensitivity	0.25uV (-12dBu) 12dB SINAD
Selectivity	70dB
Spurious and image rejection	70dB
inter modulation	70dB
AF Output	2W with 8ohm at 10%dist. or 4W with 4ohm at 10%dist.

ALINCO INCORPORATED

TWIN 21 M.I.D. TOWER BUILDING 23F, 1-61, 2-CHOME, SHIROMI CHUO-KU , OSAKA, 540-8580 JAPAN

Tel (81)6-6946-8150 fax (81)6-6946-8175
e-mail: export@alinco.co.jp

1. GENERAL

1-1 Using This Manual

Dealer-Mode:

The DR-108 is shipped ex-factory without any data written in its memories, and is not operatable unless it is first programmed by the dealer; in other words, the radio is in the dealer-mode.

User-Mode:

Once the radio is programmed with the configuration and memories by the dealer, re-positioning the jumper connector on the back of the front control panel (while the radio is turned OFF) will put the radio into operatable mode, or the user-mode. (See the diagram next page). The instruction booklet that comes with each radio explains operation in the user-mode. **Servicing-mode:** While in the user-mode, the radio can be put into a sub-mode called the servicing-mode: in this mode, the service staff can check the stored memories and circuits without erasing the stored data.

Abbreviation keys: BCLO = Busy Channel Lock Out: Transmission prohibited when receiving signal (of other Tones if TSQ is set).

TSQ = Tone Squelch: Radio unmuted upon receiving a signal with matching CTCSS sub-audible continuous tone.

The dealer-mode programming can be roughly categorized into two parts:

A) Configuration refers to parameters that customizes the DR-108 in its electrical or operational settings, regardless of the channel selection. Said settings are: tuning step, Time-Out-Timer, Penalty-timer, BCLO, key disabling, and key disabling. (Details later)

B) Memory/frequencies are receive and transmit frequencies, encode and decode of TSQ (CTCSS tones), for each individual channel.

Both the (A) and (B) items can be programmed either manually; or by PC with the ERW-2 Interface and software.

Note that either way, after programming, you must re-position the jumper connector in order to bring into the user-mode.

*Names of products mentioned in this manual are used for identification purposes only and may be trade mark and/or registered trademarks of their respective company.

In this manual, the user-mode operation is briefly described in Chapter 2 "OPERATION", where minimal user operations only are explained. The servicing-mode is described in the later section of the Chapter 2.

The dealer-mode setting/programming are described in Chapter 3.

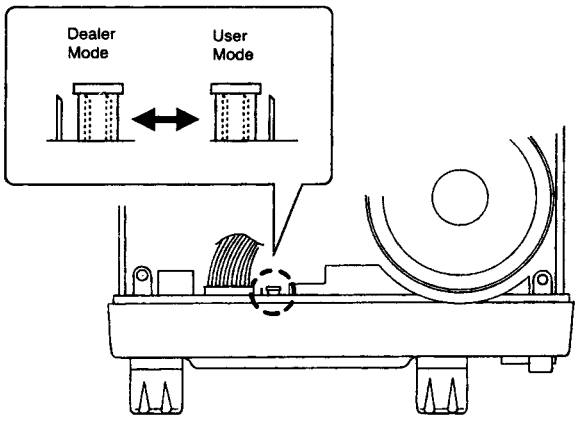

Top View

1-2 Specifications

General	Frequency Coverage:	135.000-155.000MHz(TE1) 150.000-173.995MHz(TE2)
	Number of channels	20 semi-duplex or simplex channels
	Frequency Resolution:	5, 10, 12.5, 15, 20, 25kHz steps
	Frequency Stability	±0.0005% (−20°C to 60°C)
	Antenna Impedance:	50Ω
	Power Supply Requirement:	13.8V DC ±10%
	Current Drain at 13.8V:	Receive: less than 800mA (No sound) Transmit: 9A(approx.at 25W)
	Dimensions (without projection):	140mm (W) × 40mm (H) × 154mm (D) 5.51″ (W) × 1.58″ (H) × 6.06″ (D)
	Weight (body only):	0.9kg (approx.)
Transmitter	Output Power	25W continuously adjustable to 5W
	RF output Impedance	50Ω
	Emission Mode	F3E ±5kHz; or F3E ±2.5kHz
	Spurious and harmonics	−70dB
	Residual Noise	−40dB
	Frequency split	±16MHz MAX. from receive frequency
Receiver	Sensitivity	0.25μV
	Selectivity	70dB
	Spurious and image rejection	70dB
	Inter Modulation	70dB
	Audio output	2W at 8Ω less than 10% distortion, or 4W at 4Ω less than 10% distortion

2. OPERATION

2-1 User-Mode

Press the power switch (orange) to toggle the power on and off.

1. Pressing the key toggles to override the Tone Squelching, if the decoder has been set. (Note: The key can be abled/disabled in the dealer-mode). Removing the microphone from its hook also overrides the Tone Squelching.
2. Pressing the key toggles to unmute/mute the squelch. (Note: The key can be abled/disabled in the dealer-mode).
3. Adjust the volume control ( ) for a normal listening level, having unmuted the audio.
4. Rotate the Channel selector (= dial) to desired channel.
5. Press the microphone's PTT key to transmit and talk. Release PTT to receive and listen.
6. Put back the microphone to the hook; press key, and key, to toggle back the Tone Squelching and squelching.

2-2 Servicing Mode

This mode lets a service-person to check what have been programmed in the radio without going back to the dealer-mode. Assuming a radio is in the user-mode:

1. Holding down the key, turn the power on, and keeping down the key press the key five strokes. Then release the key.
2. Press the key five strokes.
3. The radio is now under the servicing mode. Select a channel with the channel selector; each press of the key scrolls the memory content display for that channel.
4. To come back to the user mode, turn off the radio.

3. DEALER-MODE

Note: (i) The DR-108 can be programmed manually by following the steps described in this chapter. In this case the DR-108 must be in the dealer-mode during the entire programming operation.
(ii) Alternatively, the DR-108 can be programmed by PC interfaced with the ERW-2B programmer. In this case we recommend that the DR-108 be first put into the user-mode.

3-1 Initializing

Initialization erases all data in configurations and memories, and the data will be ex-factory default, and the radio automatically is put into the configuration setting mode (see section 3-2). To initialize, press and hold the ⌐√ key and turn on the power.

3-2 Configuration setting mode

When the DR-108 is in the dealer-mode, press and hold the ◁ key and turn on the power to set the radio to the configuration setting mode. This procedure sets to the configuration setting mode without going through the initializing (sec. 3-1), thereby preserving the previously programmed configurations and memories.

Once the DR-108 is in the configuration setting mode, operate in the following sequences to set the configurations:

1. As soon as the DR-108 is put into the configuration setting mode, select the **channel step** by rotating the dial. (A choice of 5, 10, 12.5, 15, 20, or 25kHz)
   Then press the ◁ key to set.
2. Now select the **time-out-timer** with the dial (upto 450 seconds in 30 sec step; note that "000" means there is no time-out setting).
   Then press the ◁ key to set.
3. Now select the **penalty-timer** with the dial (upto 15 seconds in 1 sec step). The penalty will disallows transmission for the set duration after the DR-10 times out by the time-out-timer. The penalty-timer is valid only if the time-out-timer has been set.
   Then press the ◁ key to set.
4. Now select, using the dial, the **Busy-Channel-Lock-Out** setting (ON = "4-1"/OFF = "4-0").
   Then press the ◁ key to set.
5. Now select, using the dial, whether to **enable or disable** the ◁ key during the user-mode. (Enable = "5-1"/Disable = "5-0").
   Then press the ◁ key to set.
6. Now select, using the dial, whether to **enable or disable** the ⌐√ key during the user-mode. (Enable = "6-1"/Disable = "6-0").
   Then press the ◁ key to set.

Now the configuration settings are complete. Turn off the power. Continue to section 3-3.

3-3 Memory/Frequency programming mode

Having completed the configuration settings, you can now program the memory frequencies and the CTCSS tone settings. Turn on the power.

1. As soon as the DR-108 is put into the memory/frequency programming mode, select a **channel number** using the dial where you wish to program the frequency and tone.
   Then press the key.
2. By rotating the dial, bring the display to the **receiving frequency**.
   (To change in 1MHz order, press the key and rotate the dial. To return in normal order, press the key again.)
   Then press the key.
3. By rotating the dial, bring the display to the **transmission frequency**.
   The transmission frequency is limited to ±15.995MHz from the receiving frequency.
   (To change in 1MHz order, press the key and rotate the dial. To return in normal order, press the key again.)
   Then press the key.
4. By rotating the dial, bring the display to the CTCSS **tone decode** frequency.
   Note that "0.0" means the TSQ is not set.
   Then press the key.
5. By rotating the dial, bring the display to the CTCSS **tone encode** frequency.
   Note that "0.0" means no tone is encoded.
   Then press the key.
6. The programming for the channel has been completed, and the display now shows the next channel. You can now program a new channel number. (If you wish to program a channel number other than the one now displaying, simply rotate the dial to your choice). Press the key and go to the step 2 above.
   If you wish to end the programming, turn the power off.

Having completed the configuration and memory/frequency programmings, put the radio into the user-mode by re-positioning the jumper connector (see Section 1-1).

3-4 Channel Spacing Conversion

The DR-108 has been made to comply with 25kHz (20kHz) spacing or 12.5kHz spacing. It can be changed by solder-jumper setting by the dealer in the following manner:

1. Deviation — 5kHz is set by removing the solder-bridge at the location *1.
   2.5kHz is set by solder-bridging the location *1.
2. Filter — Normal filter is set by solder-briding the location *2, and opening *3.
   Narrow filter is set by solder-bridging the location *3, and opening *2.

3. Default initial frequency

Shorting the R278 and opening the R266 will give 155.00MHz.
Opening the R278 and shorting the R266 will give 136.00MHz.

Main (RF) Unit
Bottom side

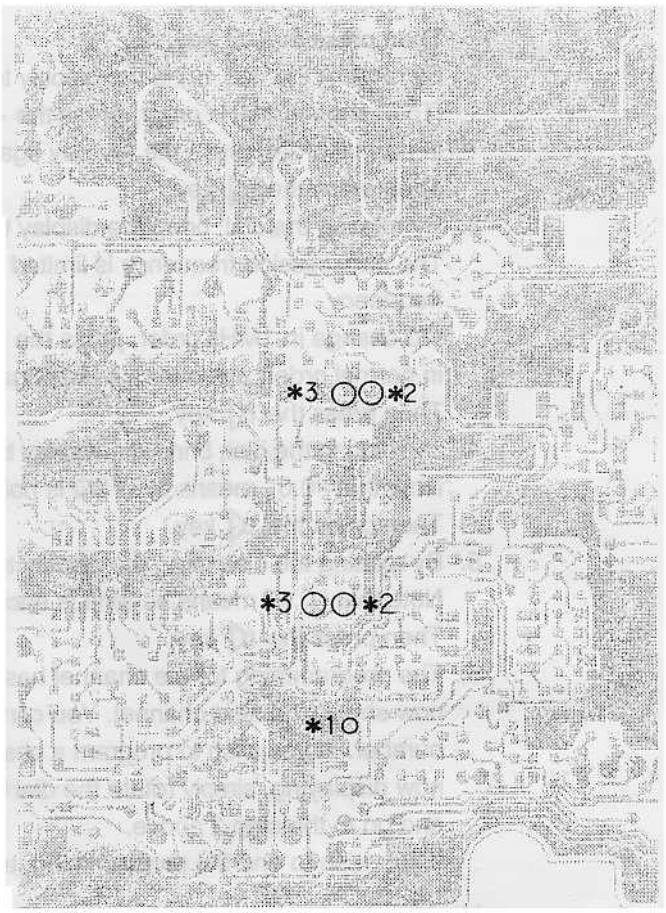

Front (CPU) Unit
Back side

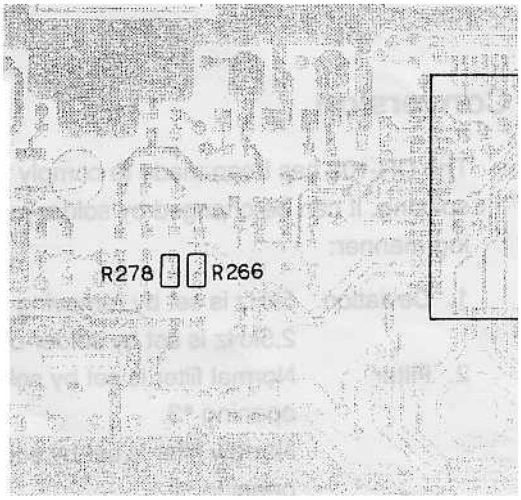

ALINCO **DR-108**

S E R V I C E I N F O R M A T I O N

CIRCUIT DESCRIPTION VHF

1) Receiver System

1. **Front End:** The signal from the antenna is passed through a low-pass filter and input to pre-selector circuit consisting of L17/L14. The signal from L14 is led to the gate of Q1. D19 is the diode limiter circuit against the excessive input power of more than 20dBm. Q1 is the FET which has two gates. The voltage of the gate 2 is set higher to get the high gainand sensitivity. The signal from Q1 is led to the triple band pass filter (L4, L5, L6) and gets the high image rejection ratio.
2. **Mixer Circuit:** The signal from the triple band pass filter is converted into the first IF signal of 21.4MHz. The receiving signal is led to the gate 1 of Q2, and the first local oscillator signal is led to the gate 2 of Q2. To get the high conversion gain, the local oscillator signal voltage is set to about 1V. To reduce the high adjacent channel interference, the bandwidth is set to 15kHz. The signal from FL2/FL3 is amplified by Q8, and input to FM IF system IC3 of TK10487.
3. **I.F. Circuit:** The TK10487 has the second local oscillator circuit, mixer circuit, detector circuit, squelch circuit, and so on. Pins 1 and 2 are the terminals of the crystal oscillator circuit. Pin 2 (emitter) is connected to the ground via the resistor R3 to prevent the oscillator from decreasing the power at the low temperature. Pin 4 of IC3 is connected to FL1 directly because the matching resistor for ceramic filter is built-in. The quadrature circuit (pin 10 of IC3) is connected to the ceramic resonator X2 for the temperature stability and good quality. The signal from pin 11 of IC3 is connected to the LPF. The detected AF signal, which has flat frequency characteristics, is led to the control unit and used as tone squelch signal. De-emphasis circuit consists of R31, R32, C26, and C27. The LPF amplifier consisting of Q5 and Q6 is locate far away from the VR in the control unit, so it outputs the high voltage signal to prevent S/N from the deterioration. The squelch switch circuit consists of Q4 and Q16, and switches on/off at the point where there is no voltage to prevent from the switching noise. The S-meter signal from pin 12 of IC3 is let to the CPU in the control unit after adjusting the level at D20 and VR5. The S-meter signal is thermal compensated by TH1 and stabilized. The noise amplifier consists of pins 13 and 14, the built-in OP Amp in IC3. The output signal of noise amplifier is amplified by Q14, rectified by D5, and then led to the pin 15 (hysteresis comparator input) of IC3.
4. **A.F. Circuit:** IC4 is about 5W audio power amplifier IC. When the capacity of pin 1 in C16 is increased more, the output incidental noise becomes smaller. The high-pitched tone becomes smaller at the same time. This radio's capacity of C16 is determined considering the high-pitched tone.

2) Transmitter System

1. **Modulation Circuit:** The microphone amplifier IC1 (IDC, LPF) consists of two operational amplifiers. The signal from the microphone is let to pre-emphasis circuit consisting of C36 and R47 and then to the limiter circuit. The limiter circuit uses the saturation of the OP amplifier. The amplified signal is input to the low-pass filter IC1A. The output signal from the microphone amplifier is passed through variable resistors VR2 for modulation adjustment and input to the VCO unit. Sub tone deviation is determined by R24, R25, and VR2. The radio does not have the adjustment variable resistor for sub tone deviation.
2. **TX Amp. Circuit:** The signal from VCO is amplified by TX, RX wide band LO amplifier Q19. The signal from Q19 is passed through the transmission/reception selector, and amplified by Q20 and Q15. The PA unit is driven at 200mW driving power.
3. **P.A. Circuit:** IC5 is 25W powered amplifier module. The output power is controlled by the voltage of V1. The RF signal amplified 25W in PA is passed through D3 and a four-stage transmission/reception low-pass filter, and input to the antenna connector.
4. **ALC Circuit:** The power detection circuit consisting of D17 and D18 rectifies the output signal voltage. The detected DC voltage is led to the VR1 (power adjust trimmer), and amplified by Q3, Q9, and Q13. Output power is controlled by voltage of V1 in IC5 and collector voltage of Q15. When the temperature goes up unusually, the power down circuit consisting of R101 and TH2 works to prevent the device from the destruction.

3) PLL Circuit

The VCO unit is designed for the PLL circuit, putting the VCO on one side, and PLL circuit on the other side. Q301 in the VCO is grounded using the gate oscillator, and its frequency covers 134MHz to 174MHz without transmission/ reception shift circuit. IC301 is pulse swallow system based PLL IC with the built-in prescaler, which synthesizes 150MHz band signal. The loop filter consisting of Q302 and Q303 is the active type.

4) Terminal Function of Microprocessor

Port No	I/O	Logic	PinName	Description
1	O		SEG19	LCDSegment19 Output
2	O		SEG20	LCDSegment20 Output
3	O		SEG21	LCDSegment21 Output
4	O		SEG22	LCDSegment22 Output
5	O		SEG23	LCDSegment23 Output
6	I		GND	AnalogGround 0V
7	I		Vref	Reference Voltage Input 5V
8	I		Vcc	CPU Power Supply hnput 5V
9	O		-	
10	O	Clock	BEEP	BeepToneOutput
11	I	Active Low	-	
12	I	Active Low	-	
13	I		HOCK	Lo: Hock ON Ho: Hock Off
14	O	Active Low	SQL	Squelch Control (L: Audio is off.)
15	O	ActiveHigh	MUT	Microphone Mute (H: Mic Amp is off.)
16	I	Active Low	RE1	RotaryEncoder Input
17	O		NC	
18	O		NC	
19	O		IF/ H/L	Lo: LOWER Ho: UPPER
20	O		MODE	Lo: USER Ho: DEALER
21	I	ActiveHigh	MODE	EEPROM Write Status External Input
22	I	Active Low	RE2	RotaryEncoder Input
23	O	Active Low	NC	
24	I	Active Low	TID	Tone Unit Detection Input
25	I	Active Low	BU	Back Up Signal Detection input
26	I	-	GND	Ground
27	I	Active Low	RST	ResetInput
28	I		Xin	Crystal Oscillator Terminal (3.58MHz)
29	O		Xout	Crystal Oscillator Terminal (3.58MHz)
30	I		GND	Ground
31	I	Active Low	TDO	CTCSS Tone Detection Output
32	I	Active Low		For Trunking
33	I	Active Low	DD5	IF SELECT "2"
34	I	Active Low	DD4	IF SELECT "1"
35	I	Active Low	DD3	IF SELECT "0"
36	I	Active Low	DD2	Band Plan 2 (5k/12.5k Selection)
37	I	Active Low	DD1	Band Plan 1
38	I	Active Low	DD0	Band Plan 0
39	O	Clock	SCL	Clock Output for EEPROM
40	I/O	Clock	SDA	Data Output for EEPROM

Port No.	I/O	Logic	PinName	Description
41	O	Clock	CLK	Clock Output
42	O	Clock	DAT	DataOutput
43	O	Clock	ST1	Strobe Output for PLL IC
44	O	Clock	ST2	Strobe Output for CTCSS IC
45	I	-	-	Pull up
46	I	Active High	SD	Signal Detection Input
47	O	-	H/L	Transmission Power (H: Low Power)
48	I	-	NU	Pull up
49	I	-	NU	Pull up
50	I	Active Low	SQU	Squelch
51	I	-	NU	Pull up
52	I	Active Low	MONI	monitor
53	I	-	nu	Pull up
54	I	Active Low	PTT	PTT Key Input
55	I	-	LV3	Power Supply Input for LCD
56	I	-	LV2	Power Supply Input for LCD
57	I	-	LV1	Power Supply Input for LCD
58	I	-	COM0	LCD Common 0 Output
59	I	-	COM1	LCD Common 1 Output
60	I	-	COM2	LCD Common 2 Output
61	I	No Use		
62	O		SEG00	LCD Segment 00 Output
63	O		SEG01	LCD Segment 01 Output
64	O		SEG02	LCD Segment 02 Output
65	O		SEG03	LCD Segment 03 Output
66	O		SEG04	LCD Segment 04 Output
67	O		SEG05	LCD Segment 05 Output
68	O		SEG06	LCD Segment 06 Output
69	O		SEG07	LCD Segment 07 Output
70	O		SEG08	LCD Segment 08 Output
71	O		SEG09	LCD Segment 09 Output
72	O		SEG10	LCD Segment 10 Output
73	O		SEG11	LCD Segment 11 Output
74	O		SEG12	LCD Segment 12 Output
75	O		SEG13	LCD Segment 13 Output
76	O		SEG14	LCD Segment 14 Output
77	O		SEG15	LCD Segment 15 Output
78	I	ActiveHigh	UL	UnlockInput
79	I	Analog	SM	SignalMeterInput
80	O		SEG18	LCD Segment 18 Output

5) Terminal Connection of Microprocessor

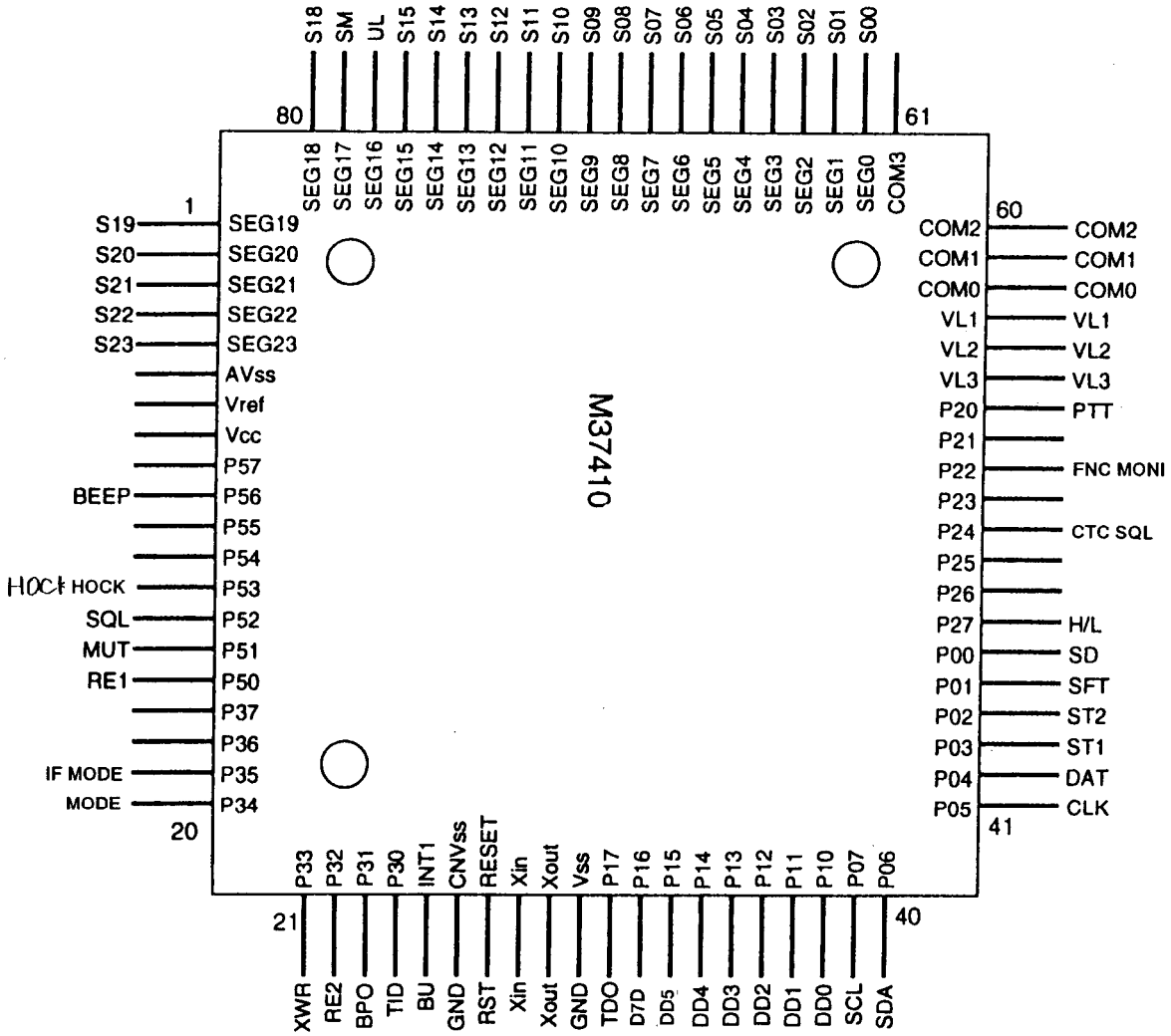

TK10487MTR(XA0144)

Narrow Band FM IF IC

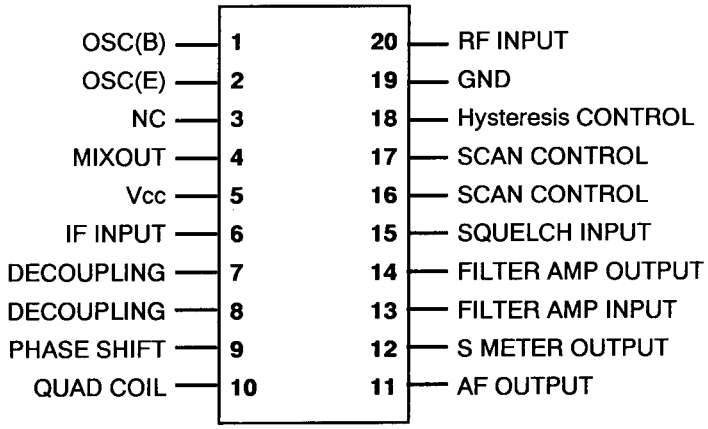

AK2341 (XA0239)
CTCSS Encoder/Decoder

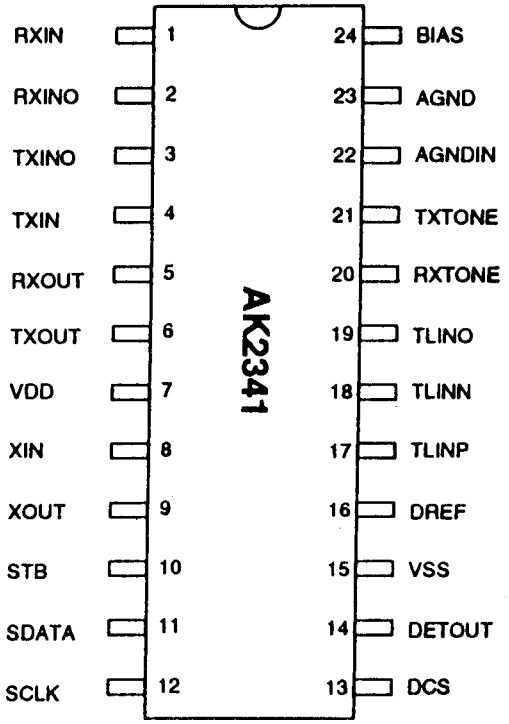

AN78L05M (XA0238)
5V Voltage Regulator

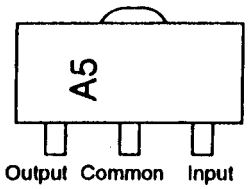

AN78L05M

AN8010M (XA0119)
Voltage Regulator

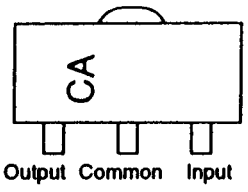

AN8010M

RH5VA32AA-T1 (XA0198)
C-MOS Voltage Detector

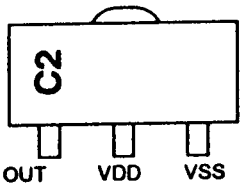

RH5VA32AA

RH5VA45AA-T1 (XA0208)
C-MOS Voltage Detector

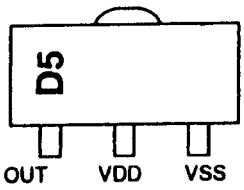

RH5VA45AA

μPC1241H (XA0079)
Audio Power Amplifiers

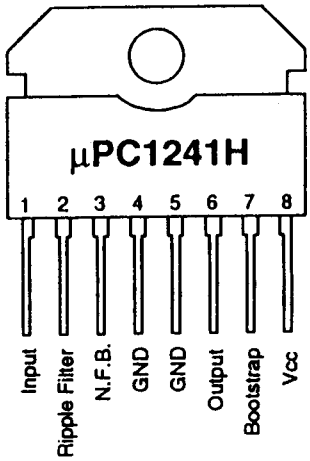

13) X24C02S8-3.0 (XA0227)
EEPROM 256 x 8Bit

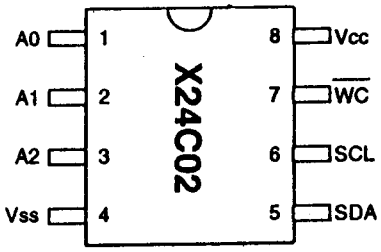

RF Power Module

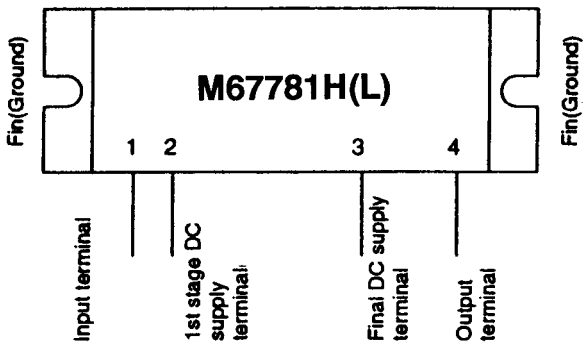

Voltage: 13.5VDC, Current 8A, Output 25W
Freq. 135～155Mhz(L)/150～174Mhz(H)

M5218FP (XA0068)
Dual Low Noise
Operational Amplifiers

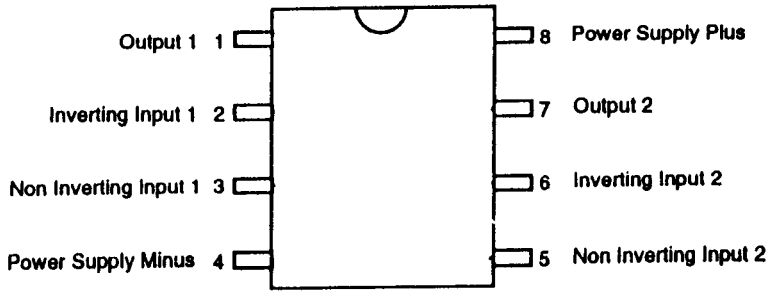

M56760FP (XA0235)
540MHz Frequency Synthesizer

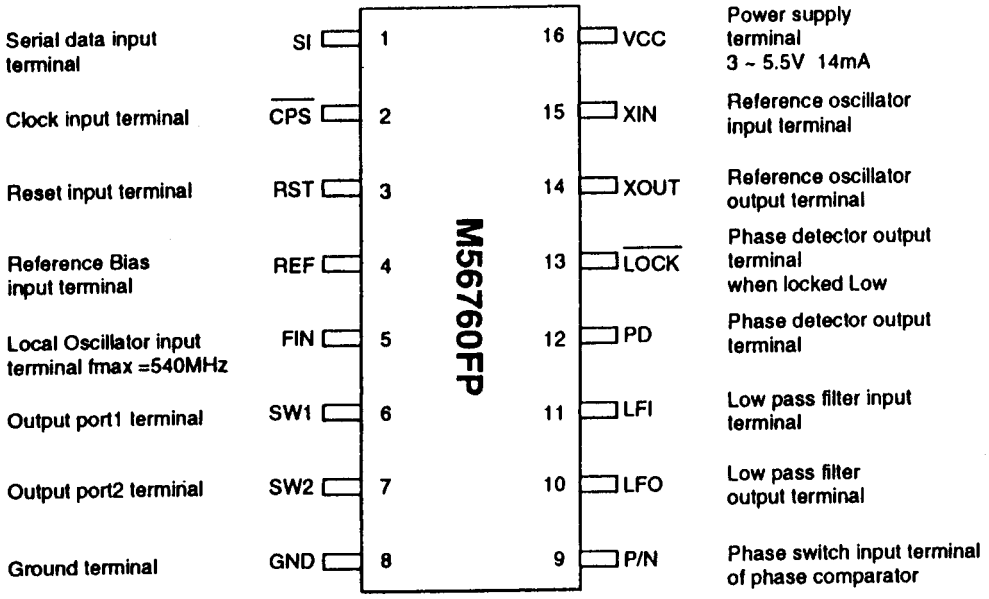

MC7808CT (XA0082)
8V Voltage Regulator

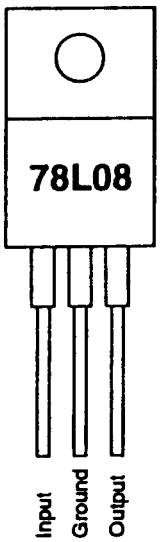

MARK	PARTS	
K52	XE0010	2SK508
V12	XE0028	3SK131V12
V11	XE0030	3SK131V11
XY	XE0021	2SK880

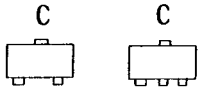

MARK	PARTS	
R24	XT0030	2SC3356
BA	XT0061	2SB1132
QK	XT0084	2SC2954
FR	XT0094	2SA1576
BR	XT0095	2SC4081
JP	XT0096	2SC4099
LD	XT0099	2SA1736
LS	XT0111	2SC4081LN
MO	XT0113	2SC2873
LY	XT0114	2SC4403

MARK	PARTS	
C2	XU0060	UMC2
24	XU0131	DTC114EU
03	XU0145	DTC143TU
26	XU0148	DTC144EU
C5	XU0152	UMC5

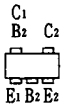

UMC2.5

XA0068	M5218FP
XA0082	MC7808CT
XA0119	AN8010M
XA0144	TK10487MTR
XA0198	RH5VA32AA
XA0208	RH5VA45AA
XA0235	M56760FP
XA0238	AN78L05M
XA0239	AK2341
XA0274	M67781H
XA0227	X24C02S-3.0T
XA0403	M37410
XA0079	μPC1241H

		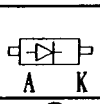 A K	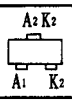 A1 K2	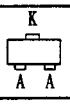 A A	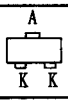 K K
XD0013	MI407	○			
XD0107	G3B	○			
XD0127	MA704WA				○
XD0130	DA204U			○	
XD0131	1SV214	○			
XD0132	1SV215	○			
XD0136	DTZ5.1A	○			
XD0145	DTZ2.2A	○			
XD0246	DAN235U			○	
XD0250	MA742		○		
XD0254	1SS355				
XD0255	MA8110H	○			
XL0051	VRPG3312X				

XL0051

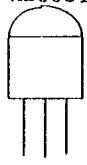

A K A

Grn Red

17) LCD Connection (EL0024)

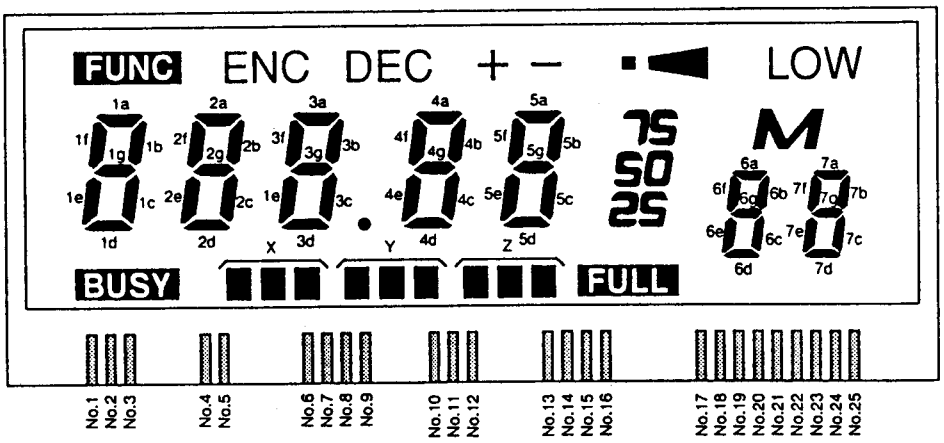

Pin No.	COMMON1	COMMON2	COMMON3
1	FUNC	1e	1f
2	1d	1g	1a
3	BUSY	1c	1b
4	ENC	2e	2f
5	2d	2g	2a
6	X	2c	2b
7	DEC	3e	3f
8	3d	3g	3a
9	●	3c	3b
10	Y	4e	4f
11	4d	4g	4a
12	+	4c	4b
13	Z	5e	5f
14	5d	5g	5a
15	−	5c	5b
16	FULL	25	50
17	75	6e	6f
18	6d	6g	6a
19	■◀	6c	6b
20	M	7e	7f
21	7d	7g	7a
22	LOW	7c	7b
23		COM.1	
24			COM.2
25	COM.0		

EXPLODED VIEW

1) Bottom View

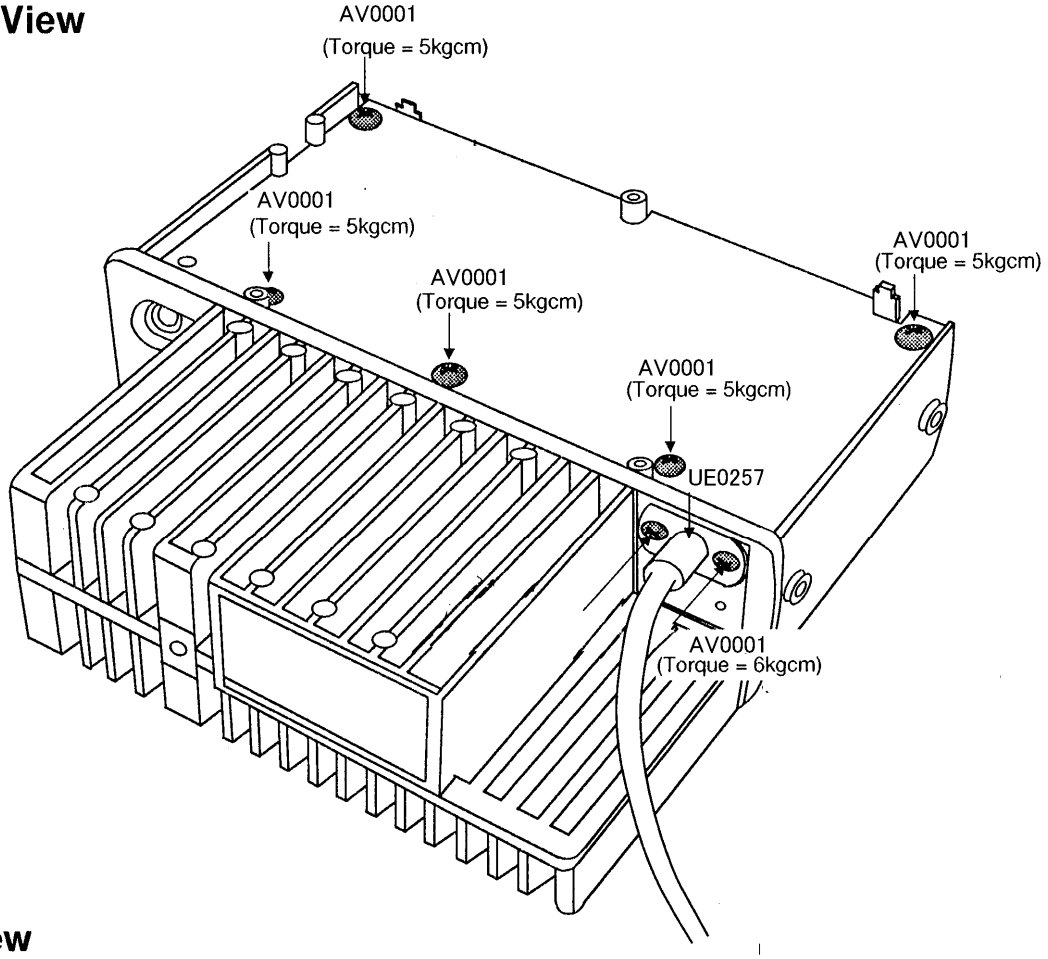

2) LCD View

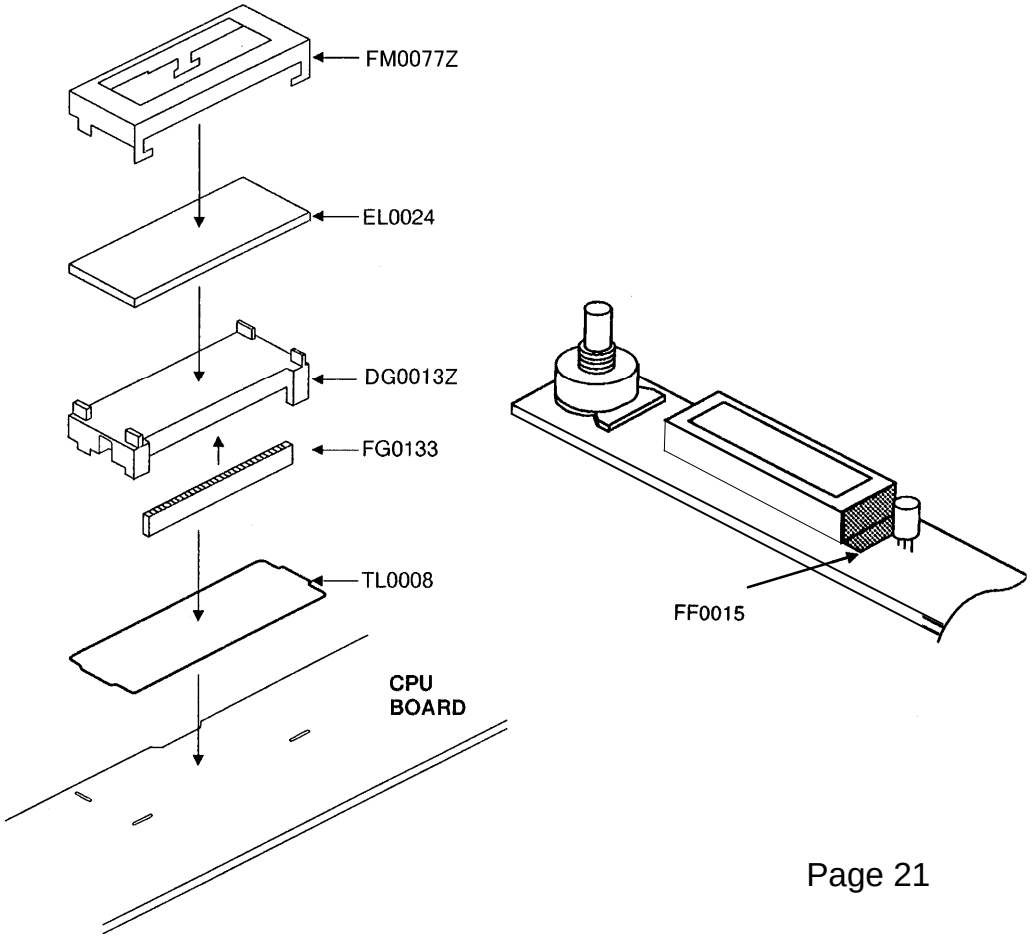

3) Top, Front View 1

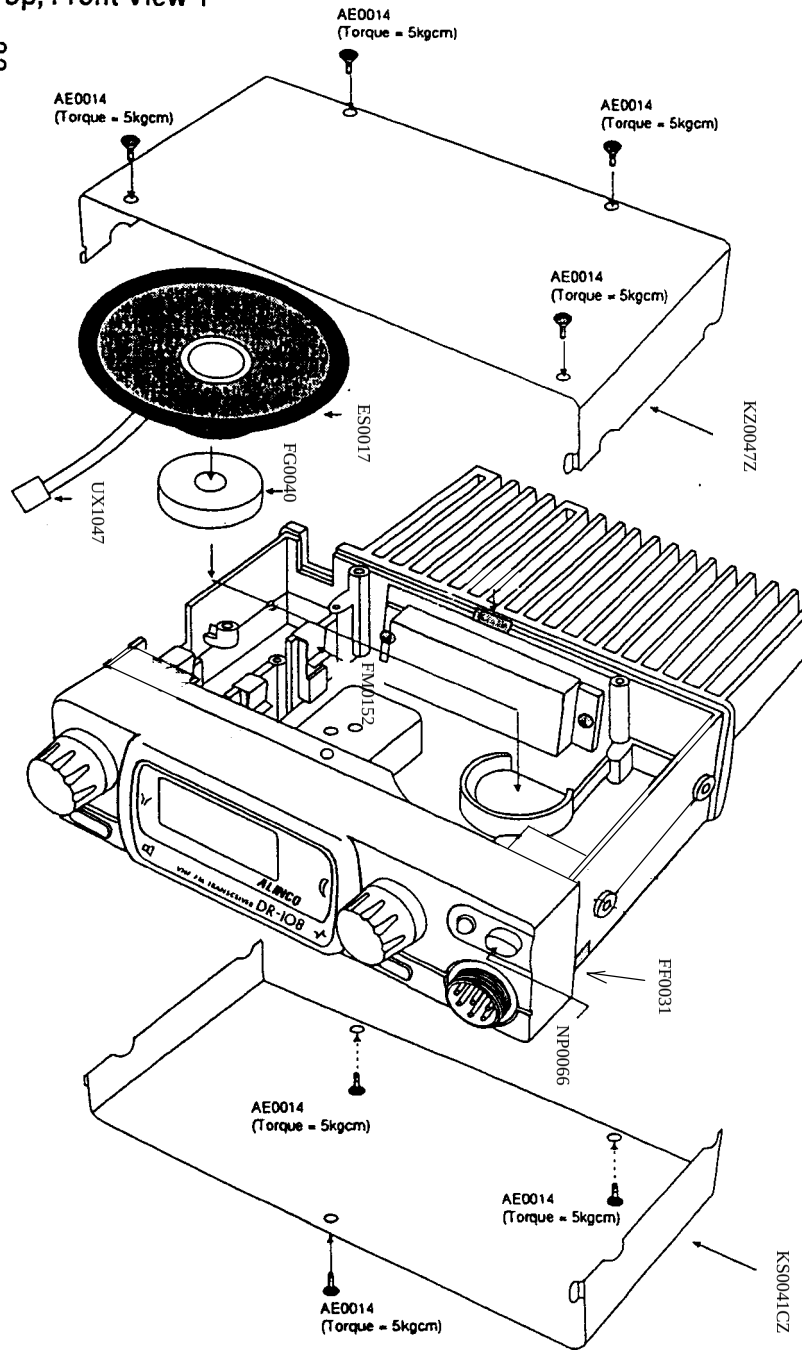

4) Top, Front Vie

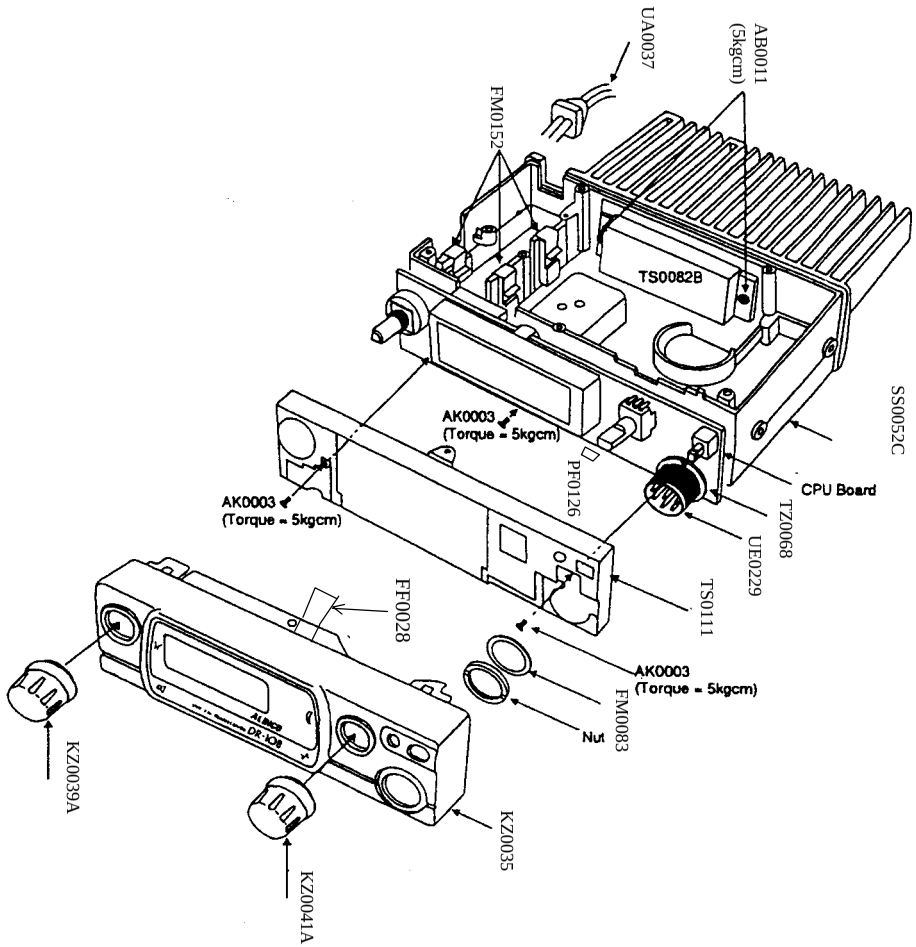

PARTS LIST

Ref.No.	Parts No	Description	Parts Name	Ver.
		MAIN Unit		
C1	CU3035	Chip C.	C1608JB1H102KTA	
C2	CU3044	Chip C.	C1608JB1H562KTA	
C3	CU3100	Chip C.	C1608JB1C393ZTA	
C4	CU3044	Chip C.	C1608JB1H562KTA	
C5	CU3002	Chip C.	C1608CH1H010CTA	
C6	CU3002	Chip C.	C1608CH1H010CTA	
C8	CS0049	Chip Tantal	TMCSA1C105MTR	
C9	CU3059	Chip C.	C1608JF1E104ZTA	
C10	CU3059	Chip C.	C1608JF1E104ZTA	
C11	CU3047	Chip C.	C1608JB1H103KTA	
C12	CU3047	Chip C.	C1608JB1H103KTA	
C13	CS0221	Chip Tantal	TMCMA1C225MTR	
C14	CU3047	Chip C.	C1608JB1H103KTA	
C15	CU3047	Chip C.	C1608JB1H103KTA	
C16	CU3102	Chip C.	C1608JB1C333KTA	
C17	CU3059	Chip C.	C1608JF1E104ZTA	
C18	CU8042	Chip C.	C2012JB1C104KTA	
C20	CU3035	Chip C.	C1608JB1H102KTA	
C21	CU3028	Chip C.	C1608CH1H271KTA	
C22	CU3035	Chip C.	C1608JB1H102KTA	
C23	CU3047	Chip C.	C1608JB1H103KTA	
C24	CU3059	Chip C.	C1608JF1E104ZTA	
C25	CU3102	Chip C.	C1608JB1C333KTA	
C26	CU3047	Chip C.	C1608JB1H103KTA	
C27	CU3049	Chip C.	C1608JB1E153KTA	
C28	CE0339	Electrolytic.C	16MV 10HW+TS	
C29	CE0343	Electrolytic.C	16MV 1000HC+T	
C30	CE0342	Electrolytic.C	16MV 470HC+TS	
C31	CS0049	Chip Tantal	TMCSA1C105MTR	
C32	CE0340	Electrolytic.C	16MV47HC+TS	
C33	CE0337	Electrolytic.C	50MV 2R2SVV+TS	
C34	CE0340	Electrolytic.C	16MV47HC+TS	
C35	CU3035	Chip C.	C1608JB1H102KTA	
C36	CU3047	Chip C.	C1608JB1H103KTA	
C38	CE0339	Electrolytic.C	16MV 10HVV+TS	
C39	CU3031	Chip C.	C1608JH1H471KTA	
C40	CS0049	Chip Tantal	TMCSA1C105MTR	
C41	CU3047	Chip C.	C1608JB1H103KTA	
C42	CU3035	Chip C.	C1608JB1H102KTA	
C43	CU3017	Chip C.	C1608CH1H330JTA	1
C43	CU3019	Chip C.	C1608CH1H470JTA	2
C44	CE0339	Electrolytic.C	16MV 10HVV+TS	
C45	CU3035	Chip C.	C1608JB1H102KTA	
C46	CU3059	Chip C.	C1608JF1E104ZTA	
C47	CS0049	Chip Tantal	TMCSA1C105MTR	
C48	CU3035	Chip C.	C1608JB1H102KTA	
C49	CU3014	Chip C.	C1608CH1H180JTA	
C50	CU3023	Chip C.	C1608CH1H101JTA	
C51	CE0339	Electrolytic.C	16MV 10HVV+TS	
C52	CE0339	Electrolytic.C	16MV 10HW+TS	
C53	CS0049	Chip Tantal	TMCSA1C105MTR	
C54	CS0237	Chip Tantal	TMCMA1A475MTR	
C55	CU3035	Chip C.	C1608JB1H102KTA	

MAIN unit

Ref.No.	Parts No.	Description	Parts Name	Ver.
C56	CU3011	Chip C.	C1608CH1H100CTA	
C57	CU3031	Chip C.	C1608JH1H471KTA	
C58	CU3035	Chip C.	C1608JB1H102KTA	
C59	CU3018	Chip C.	C1608CH1H390JTA	
C60	CE0339	Electrolytic.C	16MV10HW+TS	
C61	CU3022	Chip C.	C1608CH1H820JTA	
C62	CU3017	Chip C.	C1608CH1H330JTA	
C63	CE0341	Electrolytic.C	16MV 100HC+TS	
C65	CC5022	Ceramic C.	RCCO6SL270J-L46AU	
C66	CC5022	Ceramic C.	RCCO6SL270J-L46AU	
C67	CC5069	Ceramic C.	RCCO6SL470J-L46AU	1
C67	CC5067	Ceramic C.	RCCO6SL330J-L46AU	2
C68	CU3015	Chip C.	C1608CH1H220JTA	1
	CU3011	Chip C.	C1608CH1H100CTA	2
C69	CU3035	Chip C.	C1608JB1H102KTA	
C70	CU3015	Chip C.	C1608CH1H220JTA	
C71	CU3020	Chip C.	C1608CH1H560JTA	1
C71	CU3035	Chip C.	C1608JB1H102KTA	2
C72	CS0049	Chip Tantal	TMCSA1C105MTR	
C73	CU3035	Chip C.	C1608JB1H102KTA	
C74	CU3020	Chip C.	C1608CH1H560JTA	1
C74	CU3035	Chip C.	C1608JB1H102KTA	2
C75	CU3020	Chip C.	C1608CH1H560JTA	1
C75	CU3035	Chip C.	C1608JB1H102KTA	2
C76	CU3020	Chip C.	C1608CH1H560JTA	1
C76	CU3035	Chip C.	C1608JB1H102KTA	2
C77	CU3015	Chip C.	C1608CH1H220JTA	
C78	CU3035	Chip C.	C1608JB1H102KTA	
C79	CU3047	Chip C.	C1608JB1H103KTA	
C80	CU3004	Chip C.	C1608CH1H030CTA	
C81	CU3047	Chip C.	C1608JB1H103KTA	
C82	CU3035	Chip C.	C1608JB1H102KTA	
C83	CU3035	Chip C.	C1608JB1H102KTA	
C84	CU3035	Chip C.	C1608JB1H102KTA	
C85	CU3035	Chip C.	C1608JB1H102KTA	
C86	CU3035	Chip C.	C1608JB1H102KTA	
C87	CU3035	Chip C.	C1608JB1H102KTA	
C88	CU3064	Chip C.	C1608CH1H1R5CTA	1
C88	CU3003	Chip C.	C1608CH1H020CTA	2
C89	CU3035	Chip C.	C1608JB1H102KTA	
C90	CU3035	Chip C.	C1608JB1H102KTA	
C91	CU3035	Chip C.	C1608JB1H102KTA	
C92	CU3019	Chip C.	C1608CH1H470JTA	
C93	CU3035	Chip C.	C1608JB1H102KTA	
C94	CS0049	Chip Tantal	TMCSA1C105MTR	
C95	CU3035	Chip C.	C1608JB1H102KTA	
C96	CU3035	Chip C.	C1608JB1H102KTA	
C97	CU3019	Chip C.	C1608CH1H470JTA	
C98	CU0027	Chip C.	C2012CH1H470K	
C99	CU3019	Chip C.	C1608CH1H470JTA	
C100	CU3035	Chip C.	C1608JB1H102KTA	
C101	CU3047	Chip C.	C1608JB1H103KTA	
C102	CS0221	Chip Tantal	TMCMA1C225MTR	
C103	CU3012	Chip C.	C1608CH1H120DTA	

Ref.No.	Parts No.	Descriptio	Parts Name	Ver.
C104	CU3035	Chip C.	C1608JB1H102KTA	
C105	CE0340	Electrolyti	16MV47HC+TS	
C106	CU3012	Chip C.	C1608CH1H120DTA	
C107	CU3035	Chip C.	C1608JB1H102KTA	
C108	CU3035	Chip C.	C1608JB1H102KTA	
C109	CU3003	Chip C.	C1608CH1H020CTA	
C110	CU3003	Chip C.	C1608CH1H020CTA	
C111	CU3035	Chip C.	C1608JB1H102KTA	
C112	CC5064	Ceramic C	RCC05SL220J-L46AE	1
	CC5020	Ceramic C	DD05-979SL-1 80J 50	2
C113	CU3035	Chip C.	C1608JB1H102KTA	
C114	CU3035	Chip C.	C1608JB1H102KTA	
C115	CU3023	Chip C.	C1608CH1H101JTA	
C116	CU3035	Chip C.	C1608JB1H102KTA	
C117	CU3035	Chip C.	C1608JB1H102KTA	
C118	CE0339	Electrolyti	16MV 10HW+TS	
C119	CE0338	Electrolyti	25MV 4R7SW+TS	
C120	CU3035	Chip C.	C1608JB1H102KTA	
C121	CU3035	Chip C.	C1608JB1H102KTA	
C122	CE0341	Electrolyti	16MV 100HC+TS	
C123	CU4033	Chip C.	GRM42-6X7R102K500PT	*
C124	CU3035	Chip C.	C1608JB1H102KTA	
C125	CU3035	Chip C.	C1608JB1H102KTA	
C126	CU3002	Chip C.	C1608CH1H010CTA	
C127	CU3035	Chip C.	C1608JB1H102KTA	
C128	CU3027	Chip C.	C1608CH1H221JTA	
C129	CU3035	Chip C.	C1608JB1H102KTA	
C130	CU3039	Chip C.	C1608JB1H222KTA	
C131	CU3035	Chip C.	C1608JB1H102KTA	
C132	CE0339	Electrolyti	16MV 10HW+TS	
C133	CU3035	Chip C.	C1608JB1H102KTA	
C134	CU3023	Chip C.	C1608CH1H101JTA	
C135	CU3023	Chip C.	C1608CH1H101JTA	
C136	CU3003	Chip C.	C1608CH1H020CTA	2
C139	CC5059	Ceramic C	RCCO5SL 1 20J-L46A	1
	CC5058	Ceramic C	DDO5-979SL 1 00J50	2
C140	CS0232	Chip Tant	TMCMA1V474MTR	
C141	CU3035	Chip C.	C1608JB1H102KTA	
C147	CS0236	Chip Tant	TMCMA0J685MTR	
C148	CU3006	Chip C.	C1608CH1H050CTA	
C149	CU3047	Chip C.	C1608JB1H103KTA	
C150	CU3035	Chip C.	C1608JB1H102KTA	
C151	CS0227	Chip Tant	TMCMC1D106MTR	
C152	CS0375	Chip Tant	TMCME1V106MTR	
C153	CU3035	Chip C.	C1608JB1H102KTA	
C154	CU3035	Chip C.	C1608JB1H102KTA	
C155	CU3035	Chip C.	C1608JB1H102KTA	
C156	CU3035	Chip C.	C1608JB1H102KTA	
C157	CU3031	Chip C.	C1608JB1H471KTA	
C158	CU3020	Chip C.	C1608CH1H560JTA	1
	CU3035	Chip C.	C1608JB1H102KTA	2
C160	CU3003	Chip C.	C1608CH1H020CTA	2
C161	CU3003	Chip C.	C1608CH1H020CTA	2
C162	CU3003	Chip C.	C1608CH1H020CTA	2

MAIN unit

Ref.No.	Parts No.	Description	Parts Name	Ver.
C163	CU3006	Chip C.	C1608CH1H050CTA	
C164	CU3013	Chip C.	C1608CH1H150JTA	
C165	CU3006	Chip C.	C1608CH1H050CTA	
C167	CU3006	Chip C.	C1608CH1H050CTA	
CN1	UE0191	Connector	11PS-JE	
CN2	UE0191	Connector	11PS-JE	
CN3	UE0043	Connector	PI22A02M	
D1	XD0136	Diode	DTZ5.1ATT11	
D2	XD0014	Diode	MI308	
D3	XD0013	Diode	MI407	
D4	XD0254	Diode	1SS355	1.2
D5	XD0130	Diode	DA204UTICN5	
D6	XD0130	Diode	DA204UT106	
D8	XD0254	Diode	1SS355	
D9	XD0107	Diode	G3B	
D10	XD0254	Diode	1SS355	
D11	XD0132	Diode	1SV215TPH4	1
	XD0131	Diode	1SV214TPH4	2
D12	XD0132	Diode	1SV215TPH4	1
	XD0131	Diode	1SV214TPH4	2
D13	XD0132	Diode	1SV215TPH4	1
	XD0131	Diode	1SV214TPH4	2
D14	XD0246	Diode	DAN235UT106	
D16	XD0132	Diode	1SV215TPH4	1
	XD0131	Diode	1SV214TPH4	2
D17	XD0250	Diode	MA742-TX	
D18	XD0250	Diode	MA742-TX	
D19	XD0130	Diode	DA204UT106	
D20	XD0145	Diode	DTZ2.2ATT11	
D21	XD0132	Diode	1SV215TPH4	1
	XD0131	Diode	1SV214TPH4	2
FL1	XC0017	Filter	CFW455G	
FL2	XF0023	Filter	21.400MHz 21M7B	
FL3	XF0011Z	Filter	21.400MHz 21M152B	
IC1	XA0068	IC	M5218FP-TO1-1	
IC2	XA0082	IC	MC7808CT	
IC3	XA0144	IC	TK10487M	
IC4	XA0079	IC	uPC1241H	
IC5	XA0273	IC	M67781L	1
	XA0274	IC	M67781H	2
IC6	XA0119	IC	AN8010M-E1	
JK1	UA0040A	Connector	R-B2.0-0.2 plug 15A	
JK2	UE0257	Connector	ANT Cable	
JK4	UJ0024	Connector	HSJ1403-01-010	

The version is indicated as follows:
1: TE1
2: TE2
None: all models

MAIN unit

Ref.No.	Parts No	Description	Parts Name	Ver.
L1	QC0063	Coil	NL322522T-047M	
L2	QC0067	Coil	NL322522T-R10K	
L3	QC0074	Coil	NL322522T-8R2K	
L4	QA0100	Coil		
L5	QA0100	Coil		
L6	QA0100	Coil		
L7	QC0067	Coil	NL322522T-R10M	
L8	QC0063	Coil	NL322522T-047M	
L9	QKA45E	Coil	MR3.0 4.5T 0.8	
L10	QKA45E	Coil	MR3.0 4.5T 0.8	
L11	QKA45E	Coil	MR3.0 4.5T 0.8	
L12	QKA35D	Coil	MR3.0 3.5T 0.6	1
L13	QKA95D	Coil	MR3.0 9.5T 0.6	
L14	QA0100	Coil		
L15	QC0067	Coil	NL322522T-R10M	
L16	QKA35D	Coil	MR3.0 3.5T 0.6	
L17	QA0100	Coil		
L18	QKA45E	Coil	MR3.0 4.5T 0.8	
M106	SD0034		Earth Spring DR130	
Q1	XE0030	FET	3SK131V11T1	
Q2	XE0028	FET	3SK131V12T1	
Q3	XT0094	Transistor	2SA1576T106R	
Q4	XT0095	Transistor	2SC4081-T106R	
Q5	XT0095	Transistor	2SC4081-T106R	
Q6	XT0095	Transistor	2SC4081-T106R	
Q7	XT0061	Transistor	2SB1132 T100Q	
Q8	XT0096	Transistor	2SC4099T106N	
Q9	XT0037	Transistor	2SC2412K T146R	
Q10	XU0131	Transistor	DTC114EU-T106	
Q11	XU0148	Transistor	DTC144EU-T106	
Q12	XU0112	Transistor	DTA114YU-T106	
Q13	XT0112	Transistor	2SB1292F	
Q14	XT0095	Transistor	2SC4081-T106R	
Q15	XT0084	Transistor	2SC2954-T1	
Q16	XT0095	Transistor	2SC4081-T106R	
Q17	XU0152	Transistor	UMC5TR	
Q18	XE0021	FET	2SK880GR TE85L	
Q19	XT0114	Transistor	2SC4403	
Q20	XT0030	Transistor	2SC3356-T1	
Q21	XT0099	Transistor	2SA1736Y TE12L	
Q22	XT0095	Transistor	2SC4081-T106R	
Q24	XU0131	Transistor	DTC114EU-T106	
Q30	XU0148	Transistor	DTC144EU-T106	
R1	RK0105	Chip R.	ERJ6GEYJ2R2V	
R2	RK4034	Chip R.	ERJ12YJ471V	
R3	RK3058	Chip R.	ERJ3GSYJ473V	
R4	RK3071	Chip R.	ERJ3GSYJ564V	
R5	RK3034	Chip R.	ERJ3GSYJ471V	
R6	RK3062	Chip R.	ERJ3GSYJ104V	
R7	RK3042	Chip R.	ERJ3GSYJ222V	
R8	RK3042	Chip R.	ERJ3GSYJ222V	

Ref.No.	Parts No.	Description	Parts Name	Ver.
R9	RK3001	Chip R.	ERJ3GSYJ000V	
R10	RK3071	Chip R.	ERJ3GSYJ564V	
R11	RK3046	Chip R.	ERJ3GSYJ472V	
R12	RK3038	Chip R.	ERJ3GSYJ102V	
R13	RK3035	Chip R.	ERJ3GSYJ561V	
R14	RK3071	Chip R.	ERJ3GSYJ564V	
R15	RK3050	Chip R.	ERJ3GSYJ103V	
R16	RK4028	Chip R.	ERJ-12YJ151	
R17	RK3057	Chip R.	ERJ3GSYJ393V	
R18	RK3042	Chip R.	ERJ3GSYJ222V	
R19	RK3060	Chip R.	ERJ3GSYJ683V	
R20	RK3060	Chip R.	ERJ3GSYJ683V	
R21	RK3051	Chip R.	ERJ3GSYJ123V	
R22	RK3050	Chip R.	ERJ3GSYJ103V	
R23	RK3050	Chip R.	ERJ3GSYJ103V	
R24	RK3050	Chip R.	ERJ3GSYJ103V	
R25	RK3047	Chip R.	ERJ3GSYJ562V	1
	RK3046	Chip R.	ERJ3GSYJ472V	2
R26	RK3026	Chip R.	ERJ3GSYJ101V	
R27	RK3038	Chip R.	ERJ3GSYJ102V	
R28	RK3058	Chip R.	ERJ3GSYJ473V	
R29	RK3042	Chip R.	ERJ3GSYJ222V	
R30	RK3045	Chip R.	ERJ3GSYJ392V	
R31	RK3054	Chip R.	ERJ3GSYJ223V	
R32	RK3057	Chip R.	ERJ3GSYJ393V	
R33	RK3038	Chip R.	ERJ3GSYJ102V	
R34	RK4018	Chip R.	ERJ-12YJ220	
R35	RK3050	Chip R.	ERJ3GSYJ103V	
R36	RK3038	Chip R.	ERJ3GSYJ102V	
R37	RK3045	Chip R.	ERJ3GSYJ392V	
R38	RK3054	Chip R.	ERJ3GSYJ223V	
R39	RK3032	Chip R.	ERJ3GSYJ331V	
R40	RK3054	Chip R.	ERJ3GSYJ223V	
R41	RK3042	Chip R.	ERJ3GSYJ222V	
R42	RK3041	Chip R.	ERJ3GSYJ182V	
R43	RK3057	Chip R.	ERJ3GSYJ393V	1
	RK3055	Chip R.	ERJ3GSYJ273V	2
R44	RK3014	Chip R.	ERJ3GSYJ100V	
R45	RK3026	Chip R.	ERJ3GSYJ101V	
R46	RK3001	Chip R.	ERJ3GSYJ000V	
R47	RK3062	Chip R.	ERJ3GSYJ104V	
R48	RK3026	Chip R.	ERJ3GSYJ101V	
R49	RK3038	Chip R.	ERJ3GSYJ102V	
R50	RK3071	Chip R.	ERJ3GSYJ564V	
R51	RK3054	Chip R.	ERJ3GSYJ223V	
R53	RK3044	Chip R.	ERJ3GSYJ332V	
R54	RK4034	Chip R.	ERJ-12YJ471	
R55	RK3050	Chip R.	ERJ3GSYJ103V	
R56	RK3050	Chip R.	ERJ3GSYJ103V	
R57	RK3026	Chip R.	ERJ3GSYJ101V	
R58	RK3038	Chip R.	ERJ3GSYJ102V	
R59	RK3053	Chip R.	ERJ3GSYJ183V	
R60	RK3034	Chip R.	ERJ3GSYJ471V	
R61	RK3038	Chip R.	ERJ3GSYJ102V	

Ref.No.	Parts No.	Descriptio	Parts Name	Ver.
R62	RK3054	Chip R.	ERJ3GSYJ223V	
R63	RK3032	Chip R.	ERJ3GSYJ331V	
R64	RK3042	Chip R.	ERJ3GSYJ222V	
R65	RK3026	Chip R.	ERJ3GSYJ101V	
R66	RK3050	Chip R.	ERJ3GSYJ103V	
R67	RK3026	Chip R.	ERJ3GSYJ101V	
R68	RK3030	Chip R.	ERJ3GSYJ221V	
R69	RK3050	Chip R.	ERJ3GSYJ103V	
R70	RK3051	Chip R.	ERJ3GSYJ123V	
R71	RK3026	Chip R.	ERJ3GSYJ101V	
R73	RK3052	Chip R.	ERJ3GSYJ153V	
R74	RK3052	Chip R.	ERJ3GSYJ153V	
R75	RK3052	Chip R.	ERJ3GSYJ153V	
R76	RK3026	Chip R.	ERJ3GSYJ101V	
R77	RK3050	Chip R.	ERJ3GSYJ103V	
R78	RK3026	Chip R.	ERJ3GSYJ101V	
R79	RK3038	Chip R.	ERJ3GSYJ102V	
R80	RK3050	Chip R.	ERJ3GSYJ103V	
R81	RK3052	Chip R.	ERJ3GSYJ153V	
R82	RK3038	Chip R.	ERJ3GSYJ102V	
R83	RK3022	Chip R.	ERJ3GSYJ470V	
R84	RK3034	Chip R.	ERJ3GSYJ471V	
R85	RK3043	Chip R.	ERJ3GSYJ272V	
R86	RK3045	Chip R.	ERJ3GSYJ392V	
R88	RK3014	Chip R.	ERJ3GSYJ100V	
R89	RK0028	Chip R.	ERJ6GSYJ471V	
R91	RK3001	Chip R.	ERJ3GSYJ000V	
R92	RK3038	Chip R.	ERJ3GSYJ102V	
R93	RK3062	Chip R.	ERJ3GSYJ104V	
R94	RK3050	Chip R.	ERJ3GSYJ103V	
R96	RK3071	Chip R.	ERJ3GSYJ564V	
R98	RK0069	Chip R.	ERJ6GSYJ104V	
R99	RK3052	Chip R.	ERJ3GSYJ153V	
R100	RK3044	Chip R.	ERJ3GSYJ332V	
R101	RK0039	Chip R.	ERJ6GSYJ222V	
R102	RK3046	Chip R.	ERJ3GSYJ472V	
R103	RK3026	Chip R.	ERJ3GSYJ101V	
R104	RK3050	Chip R.	ERJ3GSYJ103V	
R105	RK3042	Chip R.	ERJ3GSYJ222V	
R106	RK3062	Chip R.	ERJ3GSYJ104V	
R107	RK0001	Chip R.	ERJ6GSYJ100V	
R108	RK3043	Chip R.	ERJ3GSYJ272V	
R109	RK3062	Chip R.	ERJ3GSYJ104V	
R112	RK3049	Chip R.	ERJ3GSYJ822V	
R113	RK3050	Chip R.	ERJ3GSYJ103V	
R114	RK3062	Chip R.	ERJ3GSYJ104V	
R115	RK3038	Chip R.	ERJ3GSYJ102V	
R116	RK3023	Chip R.	ERJ3GSYJ560V	
R121	RK3001	Chip R.	ERJ3GSYJ000V	
Rl22	RK3030	Chip R.	ERJ3GSYJ221V	
R123	RK3038	Chip R.	ERJ3GSYJ102V	
R124	RK3046	Chip R.	ERJ3GSYJ472V	

MAIN unit

Ref.No.	Parts No.	Description	Parts Name	Ver.
TC1	CT0012	Trimmer	CTZ-10AW	
TH1	XS0036	Thermistor	NTCCM16084BH222KCT	
TH2	XS0013Z	Thermistor	TD5-C2680DH	
VR1	RH0106	Trim.Pot	EVM1YSX50BQ4	
VR2	RH0103	Trlm.Pot	EVM1YSX50B14	
VR4	RH0060	Trim.Pot	MVR32HXBRN473	
VR5	RH0106	Trim.Pot	EVM1YSX50BO4	
VR6	RH0061	Trim.Pot	MVR32HXBRN472	
VR7	RH0103	Trlm.Pot	EVM1YSX50B14	
W5	MPA105GG		#30 Pink 1.5-050-1.5	
X1	X00054Z	Crystal	X49U-12.8MHz	
X2	XK0002	Discrimina	CDBM455C7	
X3	XQ0053Z	Crystal	UM5 21.855MHz	
	TS0092		VCOShield	
	TZ0049		Silicon Dumper	
	TZ0056		Silicon Dumper 49U	
W5	UX1058B		Wire	
	UX1115		Wire	
	UX1116		Wire	
	YZ0001		Silicon Grease G746	

FILTER unit				
L401	QL0011		QL0011	
C401	CU3035		C1608JB1H102KT-AS	
C402	CU3027		C1608CH1H221JT-AS	
C403	CU3028		C1608CH1H271JT-AS	
C404	CU3035		C1608JB1H102KT-AS	

The version is indicated as follows:
1: TE1
2: TE2
None: all models

CPU Unit

Ref.No.	Parts No	Description	Parts Name	Ver.
		CPU Unit		
C205	CU3101	Chip C.	C1608JB1C473KTA	
C206	CE0312	Electrolytic.C	ECEVICA100R	
C207	CU3035	Chip C.	C1608JB1H102KTA	
C208	CS0232	Chip Tantal	TMCMA1V474MTR	
C209	CU3035	Chip C.	C1608JB1H102KTA	
C210	CU3035	Chip C.	C1608JB1H102KTA	
C211	CU3035	Chip C.	C1608JB1H102KTA	
C212	CU3035	Chip C.	C1608JB1H102KTA	
C213	CU3035	Chip C.	C1608JB1H102KTA	
C215	CU3035	Chip C.	C1608JB1H102KTA	
C217	CU3051	Chip C.	C1608JB1E223KTA	
C218	CU3059	Chip C.	C1608JF1E104ZTA	
C219	CU3059	Chip C.	C1608JF1E104ZTA	
C223	CU3051	Chip C.	C1608JB1E223KTA	
C227	CU3035	Chip C.	C1608JB1H102KTA	
C229	CS0209	Chip Tantal	TMCMB0J106MTR	
C230	CU3035	Chip C.	C1608JB1H102KTA	
C231	CE0312	Electrolytic.C	ECEVICA100R	
C235	CU3047	Chip C.	C1608JB1H103KTA	
C237	CU3035	Chip C.	C1608JB1H102KTA	
C238	CU3035	Chip C.	C1608JB1H102KTA	
C239	CU3023	Chip C.	C1608CH1H101JTA	
C240	CU3023	Chip C.	C1608CH1H101JTA	
C241	CU3023	Chip C.	C1608CH1H101JTA	
C243	CS0237	Chip Tantal	TMCMA1A475MTR	
C244	CU3051	Chip C.	C1608JB1E223KTA	
C245	CS0237	Chip Tantal	TMCMA1A475MTR	
C247	CU3085	Chip C.	C1608CH1H300JTA	
C248	CU3085	Chip C.	C1608CH1H300JTA	
C249	CS0218	Chip Tantal	TMCMD1A476MTR	
C250	CU3043	Chip C.	C1608JB1H472KTA	
C251	CU3043	Chip C.	C1608JB1H472KTA	
C252	CU3059	Chip C.	C1608JF1E104ZTA	
CN201	UE0170	Connector	B9B-ZR	
CN202	UE0192	Connector	11R-JE	
CN203	UE0192	Connector	11R-JE	
CN204	UE0289	Pln Header	9210B-1-03-GF	
D201	XD0255	Diode	MA8110H	
D202	XD0127	Diode	MA704WA-TX	
D205	XL0051	LED	VRPG3312X	
IC201	XA0403	IC	M37410E6HFP	
IC202	XA0364	IC	AT24CO2N-10SI-2.7	
IC205	XA0238	IC	AN78LO5M	
IC206	XA0208	IC	RH5VA45AA-T1	
IC207	XA0198	IC	RH5VA32AA-T1	
JK201	UE0229	Connector	FM214-8SMPT	
LCD1	EL0024		LCD DRW1	

Ref.No.	Parts No.	Description	Parts Name	Ver.
PL201	EP0003	Lamp	BQ031-30403A	
PL202	EP0003	Lamp	BQ031-30403A	
Q201	XT0095	Transistor	2SC4081-T106R	
Q202	XT0113	Transistor	2SC2873Y-TE12L	
Q204	XU0145	Transistor	DTC143TU-T106	
Q205	XU0112	Transistor	DTA114YU-T106	
Q206	XU0112	Transistor	DTA114YU-T106	
Q208	XU0060	Transistor	UMC2TR	
Q209	XU0112	Transistor	DTA114YU-T106	
R201	RK3062	Chip R.	ERJ3GSYJ104V	
R203	RK3072	Chip R.	ERJ3GSYJ684V	
R204	RK3052	Chip R.	ERJ3GSYJ153V	
R205	RK3043	Chip R.	ERJ3GSYJ272V	
R206	RK3026	Chip R.	ERJ3GSYJ101V	
R207	RK3038	Chip R.	ERJ3GSYJ102V	
R208	RK3026	Chip R.	ERJ3GSYJ101V	
R209	RK3074	Chip R.	ERJ3GSYJ105V	
R213	RK3054	Chip R.	ERJ3GSYJ223V	
R214	RK3058	Chip R.	ERJ3GSYJ473V	
R224	RK3055	Chip R.	ERJ3GSYJ273V	
R225	RK3046	Chip R.	ERJ3GSYJ472V	
R226	RK3070	Chip R.	ERJ3GSYJ474V	
R227	RK3038	Chip R.	ERJ3GSYJ102V	
R228	RK3038	Chip R.	ERJ3GSYJ102V	
R229	RK3038	Chip R.	ERJ3GSYJ102V	
R230	RK3038	Chip R.	ERJ3GSYJ102V	
R231	RK3038	Chip R.	ERJ3GSYJ102V	
R232	RK3050	Chip R.	ERJ3GSYJ103V	
R234	RK3038	Chip R.	ERJ3GSYJ102V	
R235	RK3038	Chip R.	ERJ3GSYJ102V	
R236	RK3074	Chip R.	ERJ3GSYJ105V	
R237	RK3062	Chip R.	ERJ3GSYJ104V	
R238	RK3038	Chip R.	ERJ3GSYJ102V	
R239	RK3062	Chip R.	ERJ3GSYJ104V	
R240	RK3001	Chip R.	ERJ3GSYJ000V	
R241	RK3062	Chip R.	ERJ3GSYJ104V	
R242	RK3062	Chip R.	ERJ3GSYJ104V	
R243	RK3062	Chip R.	ERJ3GSYJ104V	
R244	RK3062	Chip R.	ERJ3GSYJ104V	
R245	RK3001	Chip R.	ERJ3GSYJ000V	
R246	RK3062	Chip R.	ERJ3GSYJ104V	
R247	RK3050	Chip R.	ERJ3GSYJ103V	
R248	RK3050	Chip R.	ERJ3GSYJ103V	
R249	RK3050	Chip R.	ERJ3GSYJ103V	
R250	RK3046	Chip R.	ERJ3GSYJ472V	
R25l	RK3046	Chip R.	ERJ3GSYJ472V	
R252	RK3046	Chip R.	ERJ3GSYJ472V	
R255	RK0014	Chip R.	ERJ6GEYJ680V	
R256	RK3042	Chip R.	ERJ3GSYJ222V	
R257	RK3001	Chip R.	ERJ3GSYJ000V	
R258	RK3046	Chip R.	ERJ3GSYJ472V	
R259	RK3054	Chip R.	ERJ3GSYJ223V	

Ref.No.	Parts No.	Descriptio	Parts Name	Ver.
R260	RK3038	Chip R.	ERJ3GSYJ102V	
R261	RK3038	Chip R.	ERJ3GSYJ102V	
R262	RK3038	Chip R.	ERJ3GSYJ102V	
R263	RK3038	Chip R.	ERJ3GSYJ102V	
R264	RK3038	Chip R.	ERJ3GSYJ102V	
R265	RK3050	Chip R.	ERJ3GSYJ103V	
R269	RK3054	Chip R.	ERJ3GSYJ223V	
R270	RK3001	Chip R.	ERJ3GSYJ000V	
R271	RK3062	Chip R.	ERJ3GSYJ104V	
R272	RK3058	Chip R.	ERJ3GSYJ473V	
R273	RK3058	Chip R.	ERJ3GSYJ473V	
R275	RK3062	Chip R.	ERJ3GSYJ104V	
R276	RK3038	Chip R.	ERJ3GSYJ102V	
R277	RK3037	Chip R.	ERJ3GSYJ821V	
R279	RK3001	Chip R.	ERJ3GSYJ000V	
R280	RK3038	Chip R.	ERJ3GSYJ102V	
R281	RK3038	Chip R.	ERJ3GSYJ102V	
R284	RK3001	Chip R.	ERJ3GSYJ000V	
R293	RK3050	Chip R.	ERJ3GSYJ103V	
R299	RK3001	Chip R.	ERJ3GSYJ000V	
R1001	RK3050	Chip R.	ERJ3GSYJ103V	
R1003	RK3001	Chip R.	ERJ3GSYJ000V	
R1004	RK3050	Chip R.	ERJ3GSYJ103V	
R1005	RK3050	Chip R.	ERJ3GSYJ103V	
R1006	RK3050	Chip R.	ERJ3GSYJ103V	
R1007	RK3050	Chip R.	ERJ3GSYJ103V	
R1008	RK3050	Chip R.	ERJ3GSYJ103V	
R1009	RK3050	Chip R.	ERJ3GSYJ103V	
R1014	RK3050	Chip R.	ERJ3GSYJ103V	
R1019	RK3050	Chip R.	ERJ3GSYJ103V	
R1022	RK3050	Chip R.	ERJ3GSYJ103V	
R1024	RK3001	Chip R.	ERJ3GSYJ000V	
S201	UU0015	Switch	SKQD-901	
S202	UU0015	Switch	SKQD-901	
S209	UQ0011	Switch	ESB-64801	
S210	UR0002	Switch	EVO-WQGF1524B	
VR201	RV0029	Trim.Pot	EVU-F2AF25B14	
W3	MPAL05GG		#30 Pink 1.5-050-1.5	
W4	MPAL05GG		#30 pink 1.5-050-1.5	
X203	XQ0045	Crystal	DSMT3.58MHz 18P	

CPU Unit

Ref.No.	Parts No.	Description	Parts Name	Ver.
	DG0013		LCD Light	
	FG0133		LCD Rubber Connector	
	FM0077		LCD Holder	
	TL0008		LCD Filter	
	TT1002	Tube	Tube 1mmx12	
	TZ0068		Insulalor sheet	
	UY0004	Short pin	9215H-GF	
	YZ0042	Adhesion	Bord G17	

Ref.No.	Parts No.	Description	Parts Name	QTY
			SP Unit	
	ES0017	Speaker	VS-57-0814-1.5W	1
	FG0040		Speaker Cushion	1
	UX1047		Wire	1
			Mechanica Parts	
	AB0011	Screw	D3+8FeNi(IC5)	2
	AE0014	Screw	B2.6+8FeBG(CACE)	7
	AV0001	Screw	2.6+6FeNi2	9
	AK0003	Screw	OB2.6+6FeNi1(front)	3
	FF0015		Light Shield Cloth	1
	FF0028		Cloth	2
	FF0031		Cloth	2
	FG0138	N	Rubber Cushion DR130	
	FM0152		IC Spring	3
	FM0083	Washer	Spring Washer	1
	KZ0039A		Dial Knob	1
	NP0066		Power Switch Knob	1
	KS0041B		Bottom Case	1
	KZ0035		Front Panel DR108T	1
	KZ0047Z		Top Case	1
	SS0052C		Chassis	1
	TS0111		Front Shleld Case	1
	FP0110		LED SPASER	1
	FP0126		VOL SPASER	1
	TS0082B		PA	1

The version is indicated as follows:
1: TE1
2: TE2
None: all models

VCO unit

Ref.No.	Parts No	Description	Parts Name	Ver.
	VCO Unit			
C301	CU3103	Chip C.	C1608UJ1H150JTA	
C302	CU3106	Chip C.	C1608UJ1H390JTA	
C303	CU3035	Chip C.	C1608JB1H102KTA	
C304	CS0063	Chip Tantal	TMCSA1V104MTR	
C305	CU3035	Chip C.	C1608JB1H102KTA	
C306	CU3047	Chip C.	C1608JB1H103KTA	
C307	CU3035	Chip C.	C1608JB1H102KTA	
C308	CS0235	Chip Tantal	TMCSA1V334MTR	
C309	CU3043	Chip C.	C1608JB1H472KTA	
C310	CU3043	Chip C.	C1608JB1H472KTA	
C311	CS0220	Chip Tantal	TMCMA1C225MTR	
C312	CS0220	Chip Tantal	TMCMA1C225MTR	
C313	CU3035	Chip C.	C1608JB1H102KTA	
C314	CU3043	Chip C.	C1608JB1H472KTA	
C315	CU3004	Chip C.	C1608CH1H030CTA	1
	CU3002	Chip C.	C1608CH1H0l0CTA	2
C316	CU3035	Chip C.	C1608JB1H102KTA	
C317	CS0217	Chip Tantal	TMCMC1A226MTR	
C318	CU3003	Chip C.	C1608CH1H020CTA	
C319	CU3035	Chip C.	C1608JB1H102KTA	
C320	CU3015	Chip C.	C1608CH1H220JTA	
C321	CU3031	Chip C.	C1608JB1H471KTA	
C322	CU3035	Chip C.	C1608JB1H102KTA	
C323	CU3015	Chip C.	C1608CH1H220JTA	
C324	CU3035	Chip C.	C1608JB1H102KTA	
C325	CU3035	Chip C.	C1608JB1H102KTA	
C326	CU3059	Chip C.	C1608JF1E104ZTA	
C328	CU3035	Chip C.	C1608JB1H102KTA	
C329	CU3035	Chip C.	C1608JB1H102KTA	
C330	CU3035	Chip C.	C1608JB1H102KTA	
C331	CU3043	Chip C.	C1608JB1H472KTA	
C332	CU3001	Chip C.	C1608CH1H0R5CTA	
CN301	UE0188	Connector	B9P-BC-2	
CN302	UE0185	Connector	B6P-BC-2	
D301	XD0132	Diode	1SV215TPH4	
D302	XD0132	Diode	1SV215TPH4	
D303	XD0130	Diode	DA204UT106	
D304	XD0132	Diode	1SV215TPH4	
IC301	XA0235	IC	M56760FP	
L302	QA0067	Coil	QAOO67	
L303	QC0045	Coil	NL322522T-3R3M	1
	QC0106	Coil	LER015T2R2M	2

Ref.No.	Parts No.	Description	Parts Name	Ver.
L304	QC0045	Coil	NL322522T-3R3M	1
	QC0103	Coil	LER015T1R2M	2
L305	QC0045	Coil	NL322522T-3R3M	1
	QC0106	Coil	LER015T2R2M	2
Q301	XE0010	FET	2SK508K52-T2B	
Q302	XT0111	Transistor	2SC4081LN T106S	
Q303	XT0111	Transistor	2SC4081LN T106S	
Q304	XT0096	Transistor	2SC4099T106N	
Q305	XT0096	Transistor	2SC4099T106N	
Q306	XU0060	Transistor	UMC2TR	
R301	RK3022	Chip R.	ERJ3GSYJ470V	
R302	RK3034	Chip R.	ERJ3GSYJ471V	
R303	RK3034	Chip R.	ERJ3GSYJ471V	
R306	RK3046	Chip R.	ERJ3GSYJ472V	
R307	RK3058	Chip R.	ERJ3GSYJ473V	
R308	RK3046	Chip R.	ERJ3GSYJ472V	
R309	RK3046	Chip R.	ERJ3GSYJ472V	
R310	RK3040	Chip R.	ERJ3GSYJ152V	
R311	RK3044	Chip R.	ERJ3GSYJ332V	
R312	RK3026	Chip R.	ERJ3GSYJ101V	
R313	RK3044	Chip R.	ERJ3GSYJ332V	
R314	RK3022	Chip R.	ERJ3GSYJ470V	
R315	RK3054	Chip R.	ERJ3GSYJ223V	
R316	RK3026	Chip R.	ERJ3GSYJ101V	1
	RK3023	Chip R.	ERJ3GSYJ560V	2
R317	RK3018	Chip R.	ERJ3GSYJ220V	
R318	RK3050	Chip R.	ERJ3GSYJ103V	
R319	RK3038	Chip R.	ERJ3GSYJ102V	
R320	RK3044	Chip R.	ERJ3GSYJ332V	
R321	RK3001	Chip R.	ERJ3GSYJ000V	
R322	RK3034	Chip R.	ERJ3GSYJ471V	
R323	RK3054	Chip R.	ERJ3GSYJ223V	
R324	RK3034	Chip R.	ERJ3GSYJ471V	
R325	RK3054	Chip R.	ERJ3GSYJ223V	
R326	RK3026	Chip R.	ERJ3GSYJ101V	
R327	RK3026	Chip R.	ERJ3GSYJ101V	
R328	RK3043	Chip R.	ERJ3GSYJ272V	
R329	RK3026	Chip R.	ERJ3GSYJ101V	
R331	RK3038	Chip R.	ERJ3GSYJ102V	
R332	RK3049	Chip R.	ERJ3GSYJ822V	1
	RK3050	Chip R.	ERJ3GSYJ103V	2
R333	RK3050	Chip R.	ERJ3GSYJ103V	
R334	RK3066	Chip R.	ERJ3GSYJ224V	
	TS0081	Case	VCOCase	

CTCSS unit

Ref No	Parts No.	Descriptio	Parts Name	Ver	
		EJ20u			
C501	CS0236	Chip Tant	TMCMAOJ685MTR		
C502	CU3111	Chip C.	C1608BJ1C104KTA		*
C503	CS0230	Chip Tant	TMCMA1E105MTR		
C504	CU3111	Chip C.	C1608BJ1C104KTA		
C505	CS0230	Chip Tant	TMCMA1E105MTR		*
C506	CS0230	Chip Tant	TMCMA1E105MTR		
C507	CS0230	ChIPTant	TMCMA1E105MTR		
C508	CU3023	Chip C.	C1608CH1H10lJTA		
C509	CS0237	ChIP Tan	TMCMA1A475MTR		
C510	CU3019	Chip C.	C1608CH1H470JTA		
C511	CU3035	Chip C.	C1608JB1H102KTA		
C512	CU3015	Chip C.	C16O8CH1H220KTA		
C513	CU3015	Chip C.	C1608CH1H220KTA		
CN501	UX1050	Wire	EJ20u		
IC501	XA0239	IC	AK2341		
Q501	XT0095	Tansistor	2SC4081 T106R		
R501	RK3040	Chip R.	ERJ3GSYJ152V		
R502	RK3022	Chip R.	ERJ3GSYJ470V		
R503	RK3067	Chip R.	ERJ3GSYJ274V		
R504	RK3038	Chip R.	ERJ3GSYJ102V		
R505	RK3051	Chip R.	EFJ3GSYJ123V		
R506	RK3089	Chip R.	ERJ3GSYJ912V		
R507	RK3067	Chip R.	ERJ3GSYJ274V		
R508	RK3047	Chip R.	ERJ3GSYJ562V		
R509	RK3068	Chip R.	ERJ3GSYJ334V		
R510	RK3058	Chip R.	ERJ3GSYJ473V		*
R511	RK3054	Chip R.	ERJ3GSYJ223V		
R512	RK3055	Chip R.	ERJ3GSYJ273V		
R513	RK3074	Chip R.	EFU3GSYJ105V		
R514	RK3066	Chip R.	ERJ3GSYJ224V		
R515	RK3048	Chip R.	ERJ3GSYJ682V		
VR501	RH0106	Trim. Pot	EVM1YSX50BQ4		
X501	XQ0077	Crystal	DS-MAT3.6864MHz		
	PG0057		Rubber Cushion		
	UP0243A		P.C.B.(0.1)		
	YZ0042	Adhesion	Bond G17		

The version is indicated as follows:
1: TE1
2: TE2
None: all models

Packing List

Ref.No.	Parts No.	Description	Parts Name	QTY
	Packing			
	EMS43		Microphone(EHM43)	1
	PH0009		Registration Card	
	DS0351		Specifications Card	1
	(Screw set)			
	AA0013	Screw	M5+20FeCr	4
	AD0005	Screw	4+10FeCr	1
	AE0012	Screw	Fe3PM4x8BC	4
	AN0002	Nut	Nut M-5FeCr	4
	AJ0003	Screw	M5+20FeCr	4
	AZ0009	Washer	Sprirg SW-5FeCr	4
	AZ0010	Washer	W-5 FeCr	4
	EF0005	Fuse	FGBO 15A	2
	FM0079Z		Spanner	1
	HP0006	(Screw set	Protection Bag	1
	FM0114Z	MIC HANGER		1
	HP0016		Protection Bag	1
	AJ0025	PH T3.5+10	FE/N 1	2
	ADFM78		Bracket(FM0078)	1
	HK0395A		Package DR108	1
	HM0151A		5PCS DR108	0.2
	HP0035		5X200X250	1
	HP0041		5X110X800	1
	HU0073		P.MTL/Carton 45x148	1
	HU0075		FRONT INNER DR150	1
	HU0089		P.MTL//Carton DR108	1
	HU0091		5pcs. INNER DR108	0.4
	PS0230A		INSTRUCTION DR108	1
	PT0004A		Lot Number Seal	2
	UX1118		WIRE MIC HOOK	1
	KZ0003		Button Cover	
	AD0005	Screw	4+10FeCr	1
	ADUA38		DC pawer cable(UA003	1
	HP0009	(Code)	Protection Bag	1

ADJUSTMENT

1) Required Test Equipment

1. Digital Multimeter
   Voltage range: FS= 18Vorso
   Input resistance: 1M ohm or more

2. Regulated Power Supply
   Supply voltage: 13.80V
   Current : 15A or more

3. Oscilloscope
   Measurable frequency: DC to 30MHz

4. Spectrum Analyzer
   Measuring range: Up to 2GHz or more

5. Tracking Generator
   Output frequency: Up to 2GHz or more

6. Audio Dummy Load
   Impedance: 8 ohm
   Dissipation: 5W or more

7. SSG
   Output frequency: 1GHz or more
   Output level: -20dB/0.1uV to 120dB/1V
   Moduration: FM

8. Frequency Counter
   Measurable frequency.I Up to 500MHz
   Measurements stability: 0.2ppm or so

9. Power Meter
   Measurable frequency.I Up to 500MHz
   Impedance: 50 ohm, unbalanced
   Measuring range: Full scale of 60W or so

10. Audio Voltmeter
   Measurable frequency: 50Hz to 10kHz
   Sensitivity: 1mV ~ 10V

11. Distortion Meter
   Measurable frequency 1kHz
   Input level: Up to 40dB
   Distortion level: 1% - l00%

12. Audio Generator
   Output frequency: 88.5Hz and lkHz
   Output impedance: 600 ohm, unbalanced

13. Linear Detector
   Measurable frequency Up to 500MHz
   Characteristics: Flat
   CN: 60dB or more

2) Adjustment for DR108TE1

SSG Mod:1KHz +/-1.75KHz/DEV
SP terminal is connected to 8ohm dummy load.
RX speaker output level is 50 to 100mW
1. Power supply voltage is 13.8V. Power switch is off.
2. Turn the squelch and volume knobs counterclockwise.
3. Press and hold the "F"key,then turn on the power switch.
The display shows that the frequency is 155.00MHz

PLL Adjustment

Item	Condition	Measurement			Adjustment			Specification/ Remarks
		Test equipment	Unit	Terminal	Unit	Parts	Method	
Frequency	Frequency:145.00MHz power: Low PTT: ON	Freq.Counter Power Meter	Back	ANT	MAIN	TC1	145.00 MHz	+/- 100Hz
PLL VCO	Frequency:130.00MHz PTT: OFF	Digital Multimeter	Main	SD	PLL VCO	L302	0.85V	0.75-0.85V

RX Adjustment (ALL SSG out =EMF)

Item	Condition	Measurement			Adjustment			Specification/ Remarks
		Test equipment	Unit	Terminal	Unit	Parts	Method	
RX Sensitivity	Frequency:145.03MHz SSG out:0dBu	SSG Distortion Meter	Main	TP1	Main	L4-L6 L14	SINAD: MAX	Turn the coil L14, L4,L5,L6,L4,L5 to the MAX in order
	Frequency:136.03MHz SSG out:-10dBu						Check	SINAD is above12dB
	Frequency:145.03MHz SSG out:-8.0dBu							
	Frequency:155.03MHz SSG out:-8.0dBu							
	Frequency:130.03MHz SSG out:10.0dBu							
S Meter	Frequency:145.03MHz SSG out: 15dBu Mod: OFF	LCD S Meter	Front Panel		Main	VR5	Full flashing	
	Frequency:145.03MHz SSG out: off Mod: OFF						Check	S Meter does not light.
SQL	Frequency:145.03MHz SQL VR:Threshold	LCD Busy	Front Panel		Main		Make sure that SQL is open	Busy ON

TX Adjustment

								NARROW	WIDE	
Item	Condition	Measurement			Adjustment			Specification/ Remarks	Method	Specification/ Remarks
		Test equipment	Unit	Terminal	Unit	Parts	Method			
High Powe	VR1: max Power:High PTT: ON	Power Meter AG Linear Detector Power Meter	Back	ANT	Main					
	Frequency:145.00MHz Power:High PTT: ON					VR1	34w	+/- 1.0W Below 9.5A	34w	+/- 1.0W Below 9.5A
	Frequency:136.00MHz Power:High PTT: ON						Check	Above 5W	Check	Above 5W
DEV	Frequency:145.00MHz Power: Low AG:1KHz -30dBm PTT: ON					VR2	2.4kHz /Dev	2.4 +/-0.2kHz/Dev	4.7kHz /Dev	4.7 +/-0.2kHz/Dev
MIC Gain	Frequency:145.00MHz Power: Low AG:1KHz -47dBm PTT: ON		Back	ANT	Main	VR4	2.0kHz /Dev	2.0 +/-0.2kHz/Dev	4.0kHz /Dev	4.0 +/-0.2kHz/Dev
CTCSS To DEV	Frequency:145.00MHz Power: Low AG: OFF PTT: ON ToneSW(88.5Hz):ON					VR501	0.35kHz /Dev	0.35 +/-0.1kHz/Dev	0.7kHz /Dev	0.60-0.85kHz/Dev

If the logic boad EJ-21D or EJ21D exists ,first pull out the logic board
and re-connect W3,W4,W5, so that the radio comes back to conventional

2) Adjustment for DR108TE2

SSG Mod:1KHz +/-1.75KHz/DEV
SP terminal is connected to 8ohm dummy load.
RX speaker output level is 50 to 100mW
1. Power supply voltage is 13.8V. Power switch is off.
2. Turn the squelch and volume knobs counterclockwise.
3. Press and hold the "F"key,then turn on the power switch.
The display shows that the frequency is 155.00MHz

PLL Adjustment

Item	Condition	Measurement			Adjustment			Specification/ Remarks
		Test equipment	Unit	Terminal	Unit	Parts	Method	
Frequency	Frequency:160.00MHz power: Low PTT: ON	Freq.Counter Power Meter	Back	ANT	MAIN	TC1	160.00 MHz	+/- 100Hz
PLL VCO	Frequency:174.00MHz PTT: OFF	Digital Multimeter	Main	SD	PLL VCO	L302	7.5V	7.0-8.0V

RX Adjustment (ALL SSG out =EMF)

Item	Condition	Measurement			Adjustment			Specification/ Remarks
		Test equipment	Unit	Terminal	Unit	Parts	Method	
RX Sensitivity	Frequency:160.03MHz SSG out:0dBu	SSG Distortion Meter	Main	TP1	Main	L4-L6 L14	SINAD: MAX	Turn the coil L14, L4,L5,L6,L4,L5 to the MAX in order
	Frequency:160.03MHz SSG out:-10dBu						Check	SINAD is above12dB
	Frequency:155.03MHz SSG out:-8.0dBu							
	Frequency:173.03MHz SSG out:-8.0dBu							
	Frequency:145.03MHz SSG out:10.0dBu							
S Meter	Frequency:160.03MHz SSG out: 15dBu Mod: OFF	LCD S Meter	Front Panel		Main	VR5	Full flashing	
	Frequency:160.03MHz SSG out: off Mod: OFF						Check	S Meter does not light.
SQL	Frequency:160.03MHz SQL VR:Threshold	LCD Busy	Front Panel		Main		Make sure that SQL is open	Busy ON

TX Adjustment

Item	Condition	Measurement			Adjustment			NARROW Specification/ Remarks	WIDE Method	WIDE Specification/ Remarks
		Test equipment	Unit	Terminal	Unit	Parts	Method			
High Powe	VR1: max Power:High PTT: ON	Power Meter	Back	ANT	Main					
	Frequency:160.00MHz Power:High PTT: ON					VR1	34w	+/- 1.0W Below 9.5A	34w	+/- 1.0W Below 9.5A
	Frequency:145.00MHz Power:High PTT: ON						Check	Above 5W	Check	Above 5W
DEV	Frequency:160.00MHz Power: Low AG:1KHz -30dBm PTT: ON					VR2	2.4kHz /Dev	2.4 +/-0.2kHz/Dev	4.7kHz /Dev	4.7 +/-0.2kHz/Dev
MIC Gain	Frequency:160.00MHz Power: Low AG:1KHz -47dBm PTT: ON	AG Linear Detector Power Meter	Back	ANT	Main	VR4	2.0kHz /Dev	2.0 +/-0.2kHz/Dev	4.0kHz /Dev	4.0 +/-0.2kHz/Dev
CTCSS Tone DEV	Frequency:160.00MHz Power: Low AG: OFF PTT: ON ToneSW(88.5Hz):ON					VR501	0.35kHz /Dev	0.35 +/-0.1kHz/Dev	0.7kHz /Dev	0.60-0.85kHz/Dev

If the logic boad EJ-21D or EJ21D exists ,first pull out the logic board
and re-connect W3,W4,W5, so that the radio comes back to conventional

3) Adjustment Points

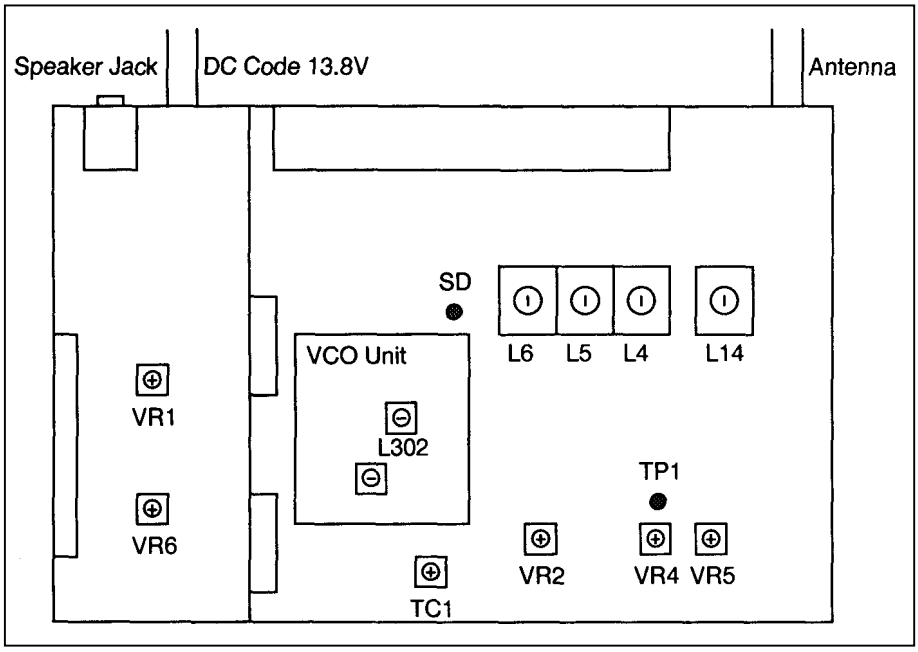

4) Adjustment Quick Reference

SSG Output = EMF

		DR108TE1	DR108TE2
Parts	Item	Specifications	Specifications
L4	RX Sensitivity	-10dBpV (12dB SINAD)	-10dBpV (12dB SINAD)
L5	RX Sensitivity	-10dBpV (12dB SINAD)	-10dBpV (12dB SINAD)
L6	RX Sensitivity	-10dBpV (12dB SINAD)	-10dBpV (12dB SINAD)
L14	RX Sensitivity	-10dBpV (12dB SINAD)	-10dBpV (12dB SINAD)
L302	VCO Frequency	0.75V~0.95V	7.0V~8.0V
TC1	Reference Frequency	145.00MHz +/-100Hz	160.00MHz +/-100Hz
VR1	TX High Power	34W +/- 1.0W	34W +/- 1.0W
VR2	Deviation	2.4kHz +/-0.2kHz	2.4kHz +/-0.2kHz
VR4	Mic Gain	2.0kHz +/-0.2kHz	2.0kHz +/-0.2kHz
VR5	S Meter	15dBu "Full"	15dBu "Full"

CPU unit A Side

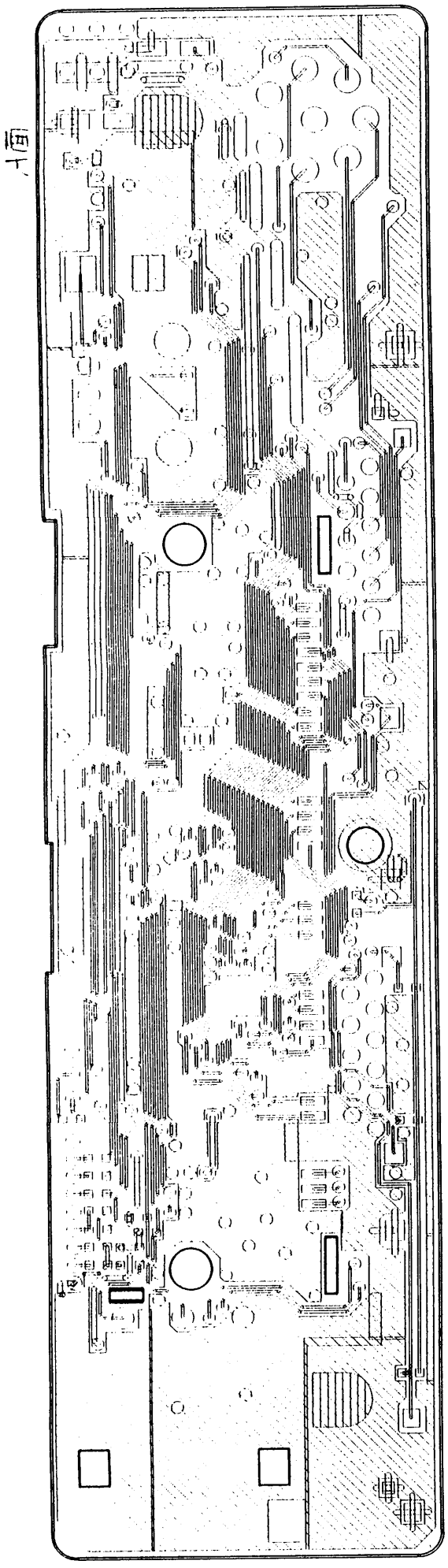

CPU unit B Side

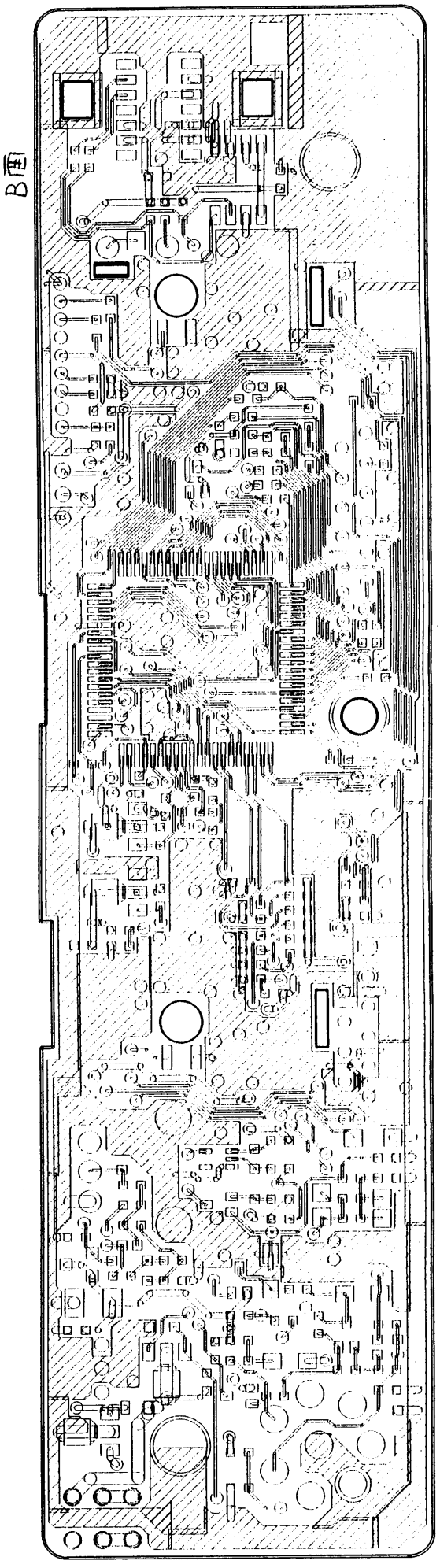

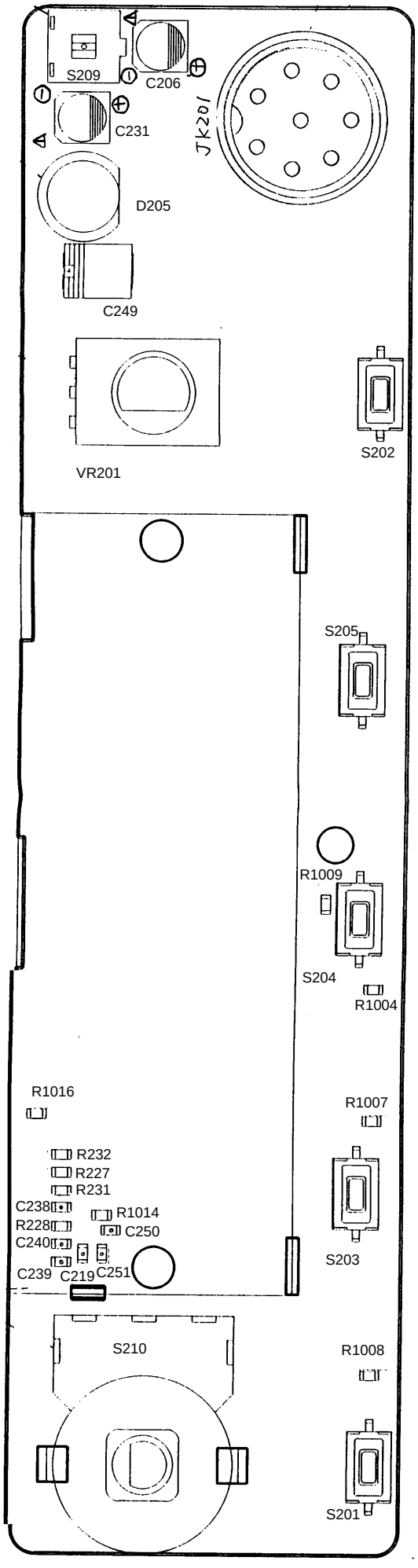

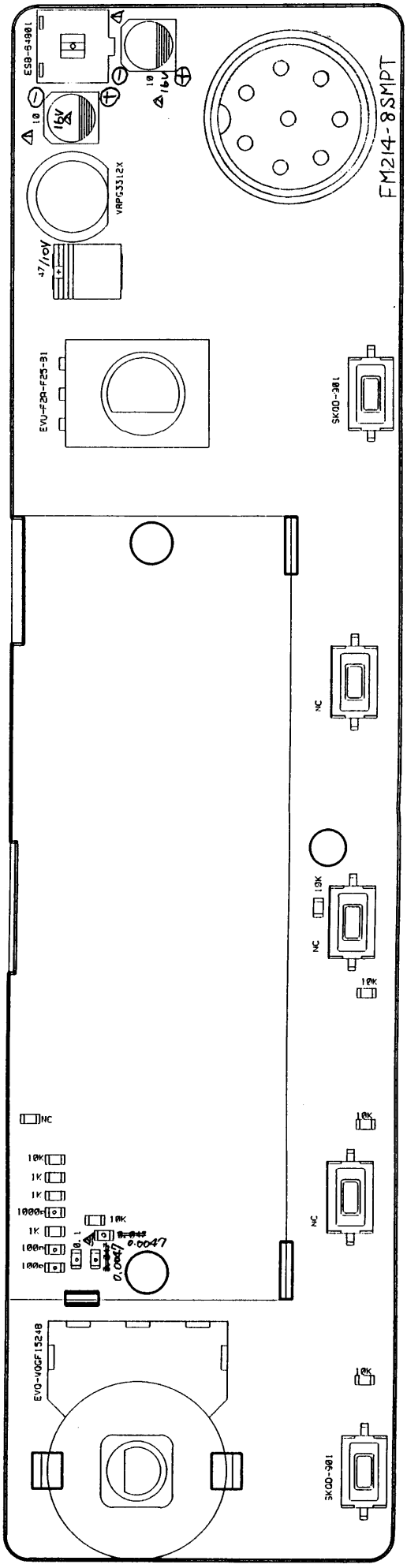

JK201にはセ"ソエンコート"とコネクタが取付けられる

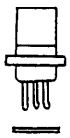

CPU UNIT
A SIDE

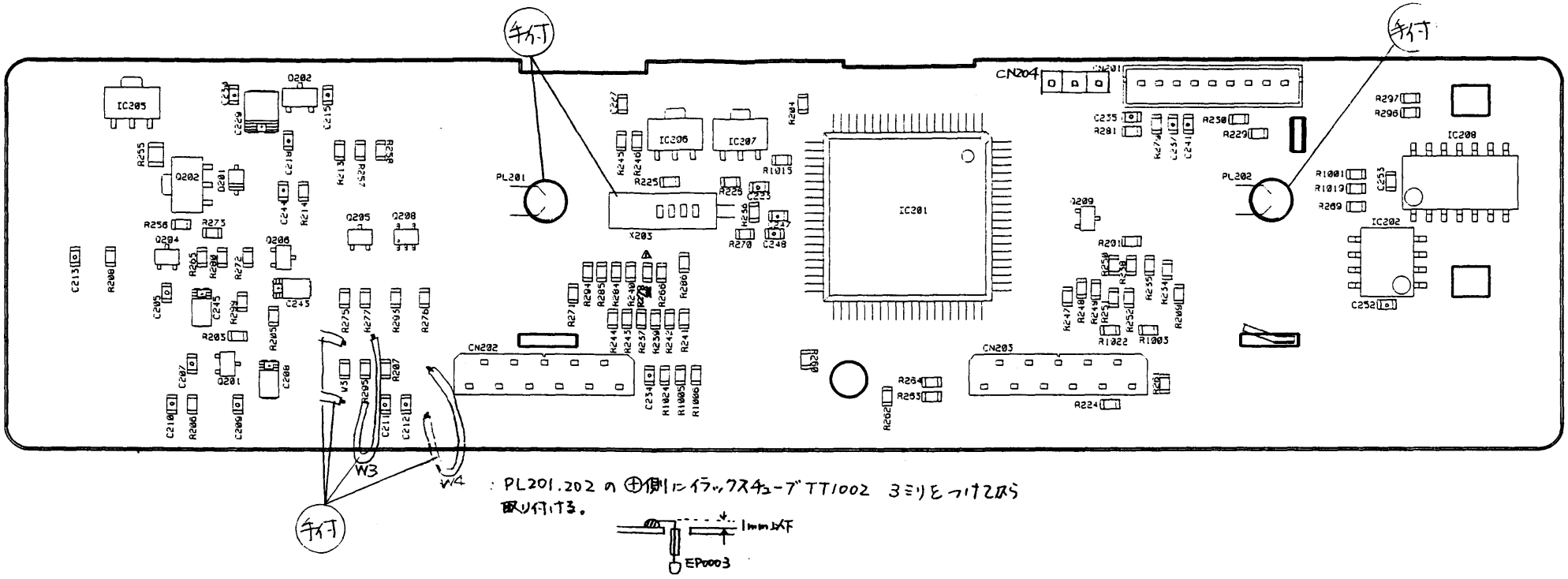
手付
手付
手付
CN204
PL201
PL202
IC201
IC202
IC203
IC205
IC206
IC207
IC208
CN202
CN203
W3
W4
：PL201.202 の ⊕側にインラックスヒューズ TT1002 3ミリをつけてから
取り付ける。
1mm以下
EP0003

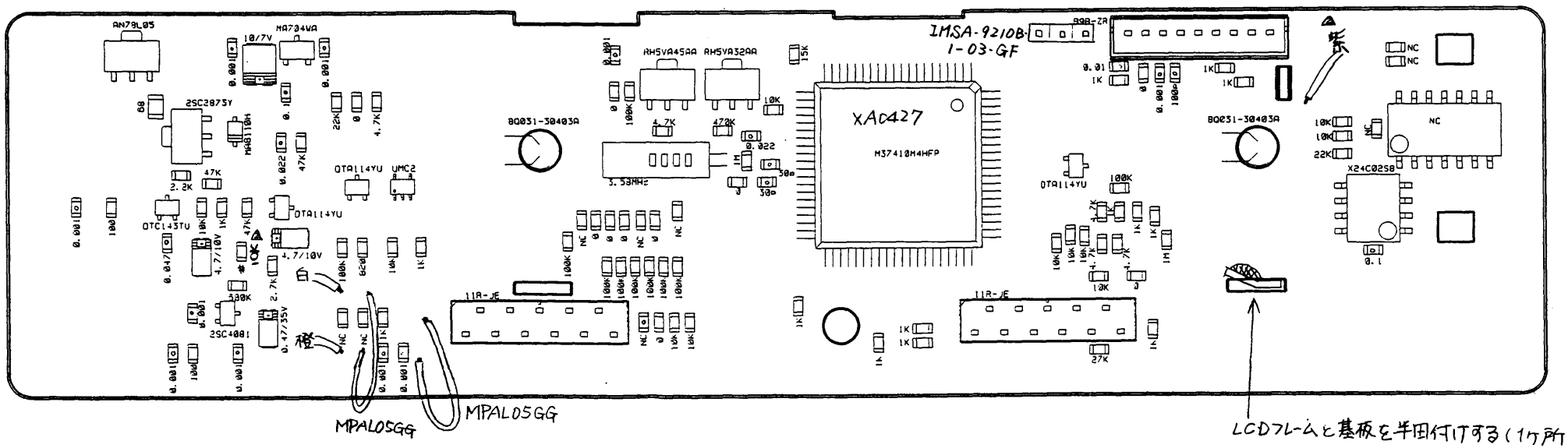
IMSA-9210B-
1-03-GF
XAC427
M37410M4HFP
橙
MPAL05GG
MPAL05GG
LCDフレームと基板を半田付けする（1ヶ所）

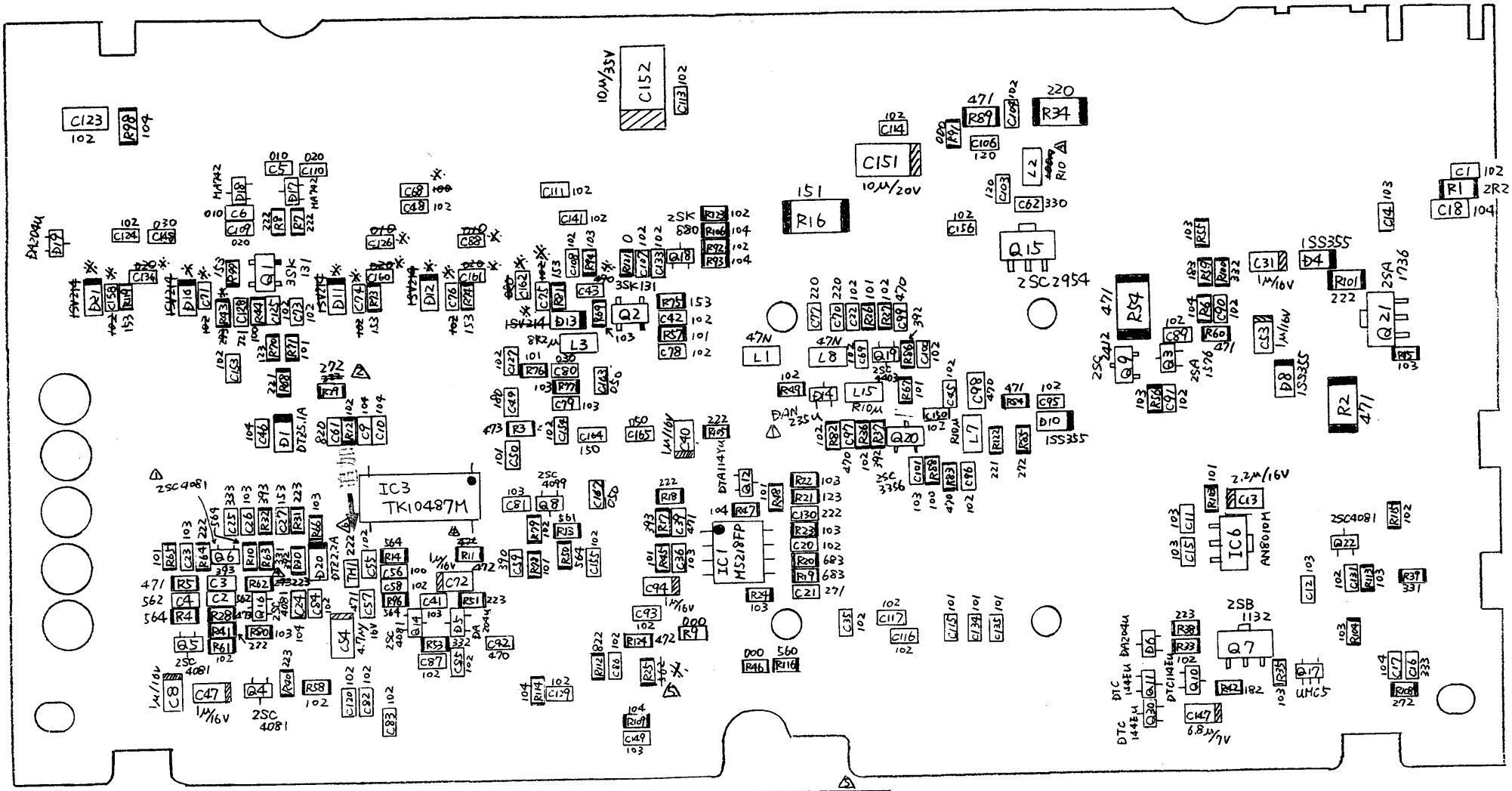

※	C68	R43	C43	C88.126	C71,74,75,76,158	C136,160,161,162	D11,12,13,16,21	R25
TE2	100	273	470	020	102	020	1SV214	562
TE1	220	393	330	1R5	560	NC	1SV215	472

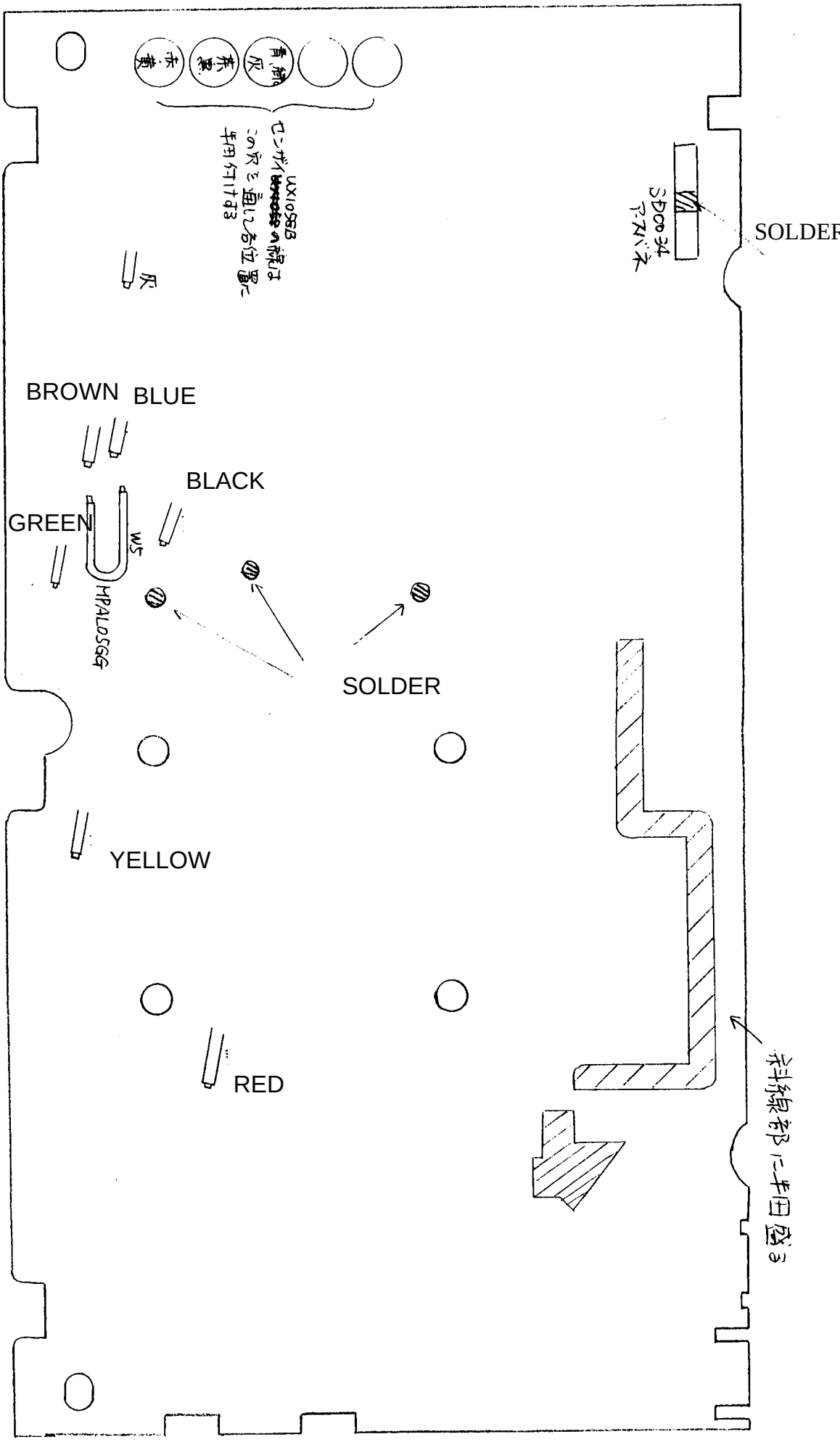
青
灰
赤
赤
UX10SSB
この穴と通じる位置に
半田付けする
SDD34
アース
SOLDER
BROWN
BLUE
BLACK
GREEN
WS
HPALO5GG
SOLDER
YELLOW
RED
斜線部に半田盛る

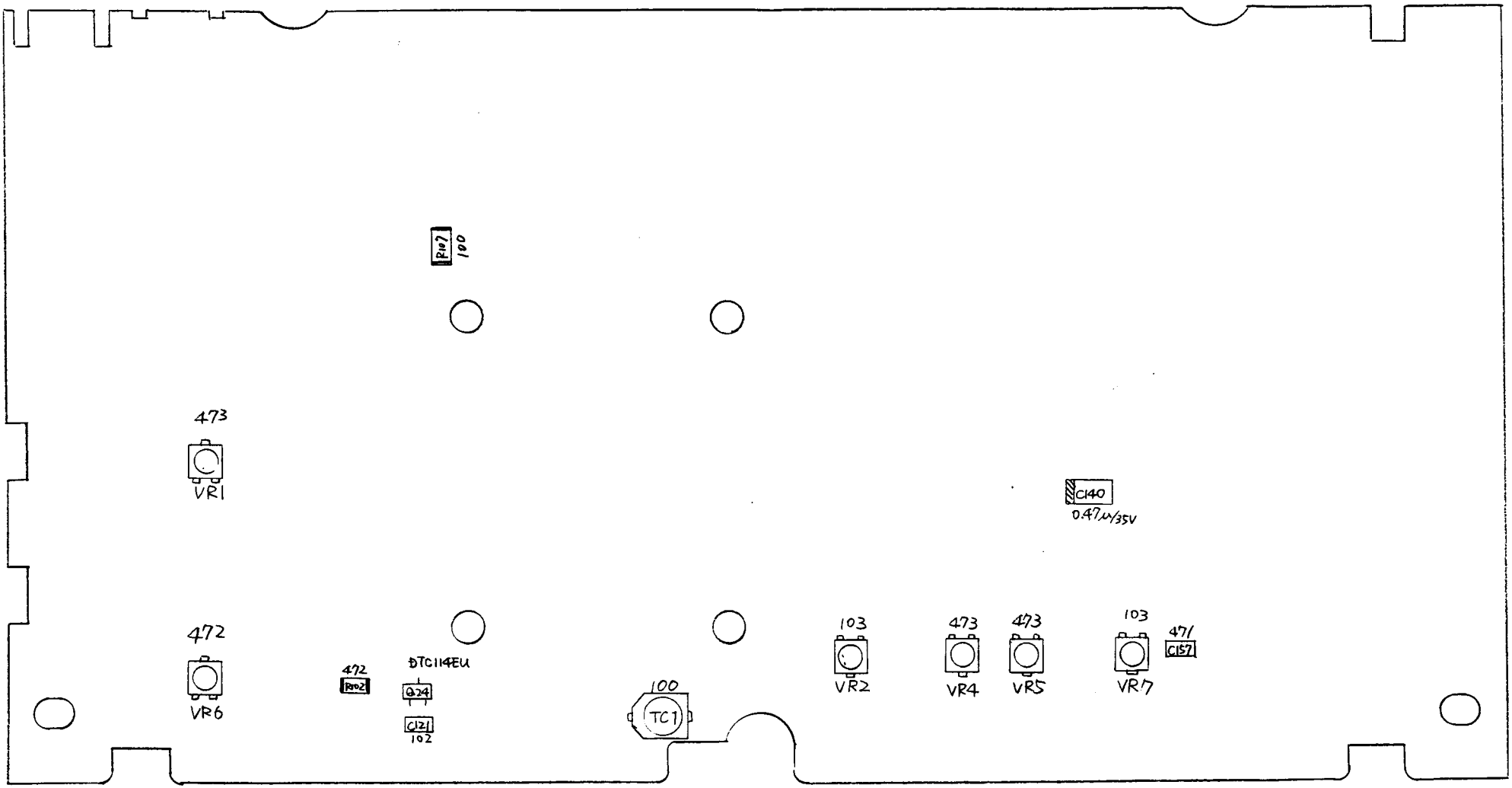
R107
100
473
VR1
C140
0.47μ/35V
472
VR6
472
R102
DTC114EU
Q24
C121
102
100
TC1
103
VR2
473
VR4
473
VR5
103
VR7
471
C157

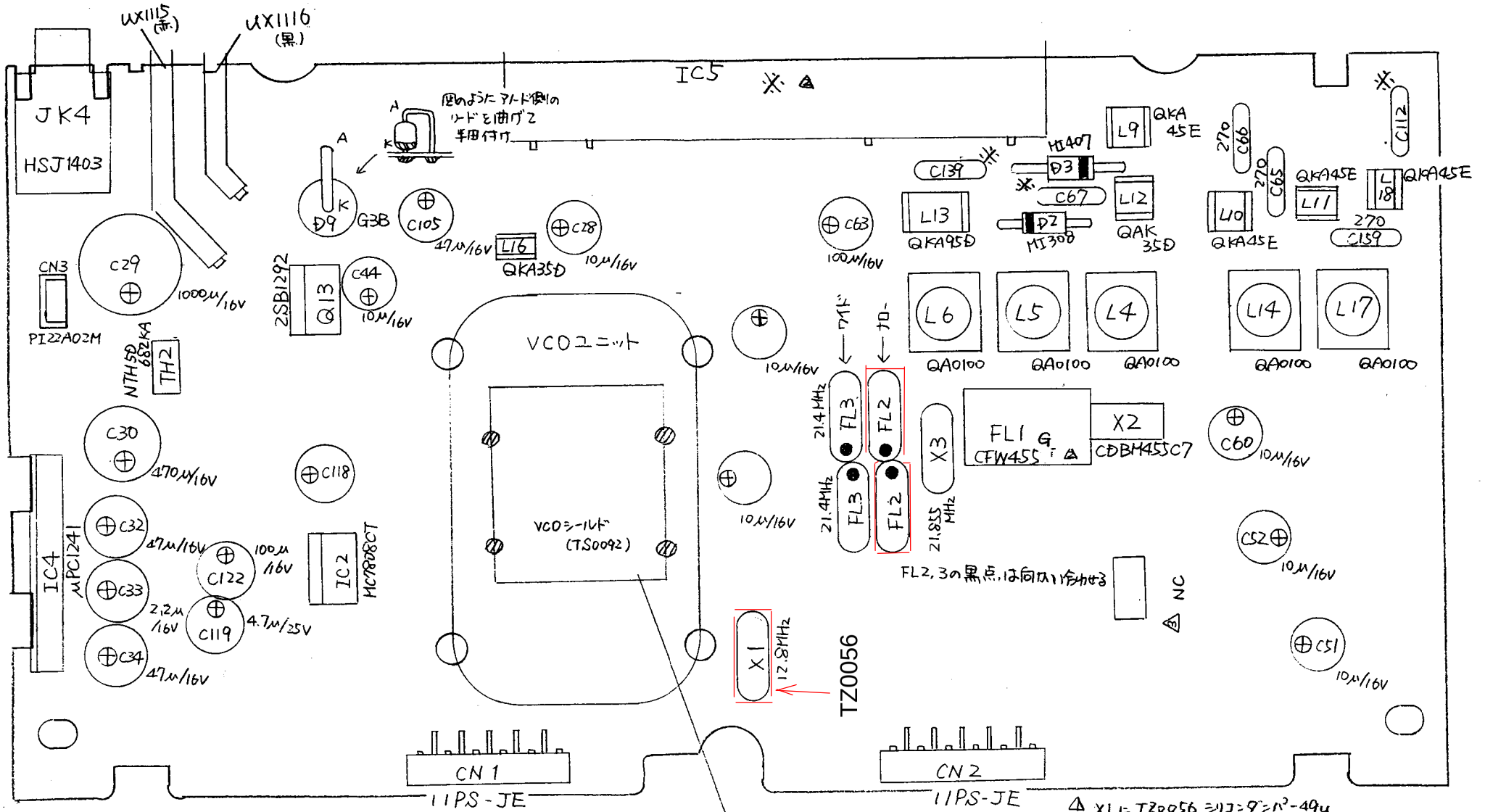

△

※	C112	C139	C67	IC5
TE2	180	100	330	M67781H
TE1	220	120	470	M67781L

TS0092, VCOシールドは基板上に貼り、4ヶ所で半田付け(斜線部)

△ X1 : TZ0056 シリコンダンパー-49μ
FL2 TZ0049 シリコンダンパー-41μ をはがして取り付け

A side

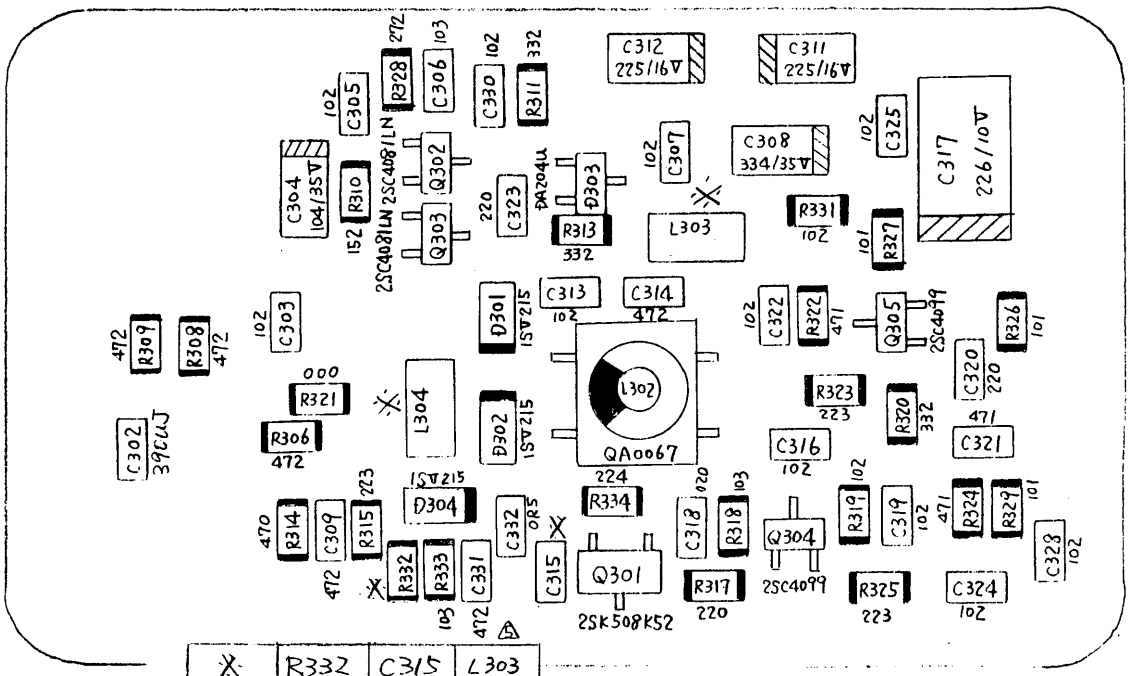
C312 225/16V
C311 225/16V
C317 226/10V
C308 334/35V
C304 104/35V
C305
C306
C307
C310
C313
C314
C315
C316
C317
C318
C319
C320
C321
C322
C323
C324
C325
C326
C327
C328
C329
C330
C331
C332
C333
C334
R301
R302
R303
R304
R305
R306
R307
R308
R309
R310
R311
R312
R313
R314
R315
R316
R317
R318
R319
R320
R321
R322
R323
R324
R325
R326
R327
R328
R329
R331
R332
L302
L303
L304
L305
D301
D302
D303
D304
Q301
Q302
Q303
Q304
Q305
Q306
IC301
M56760FP
CN301
CN302
B4P-BC-2
1SV215
2SC4081LN
2SC4099
2SK508K52
DA204U
QA0067

B side

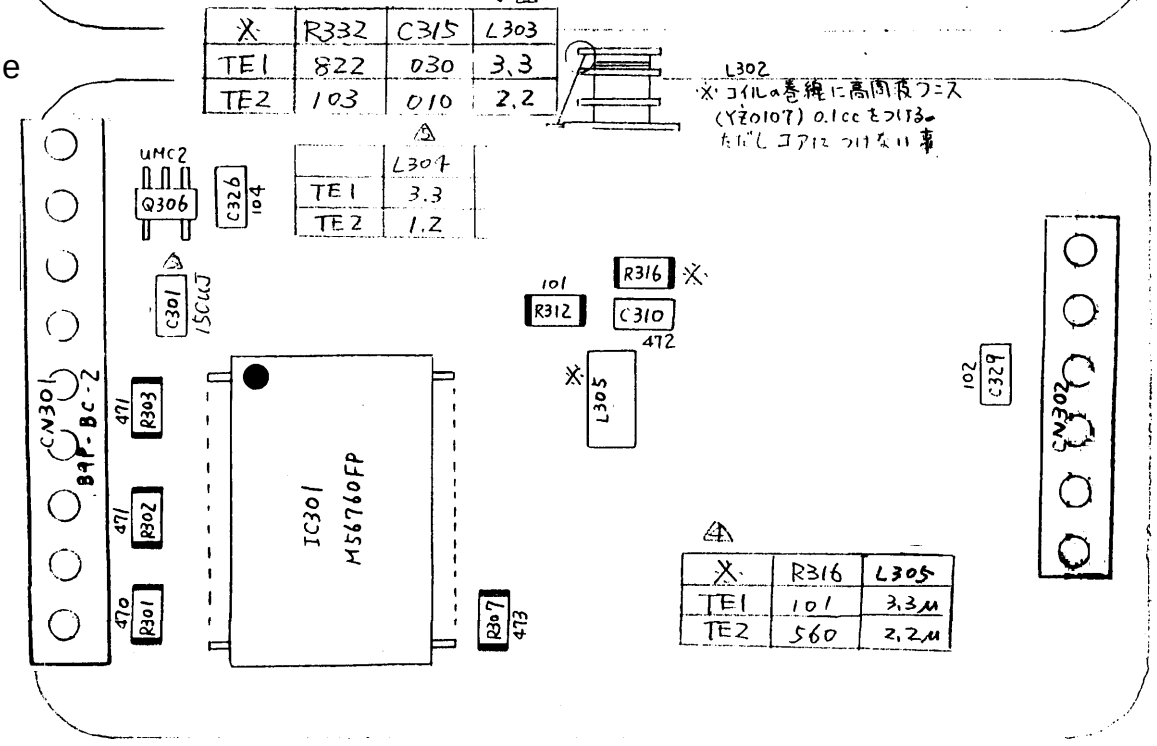
※ R332 C315 L303
TE1 822 030 3.3
TE2 103 010 2.2
L302
※ コイルの巻線に高周波ワニス (Y20107) 0.1cc をつける。ただしコアにつけない事
L303
TE1 3.3
TE2 1.2
※ R316 L305
TE1 101 3.3μ
TE2 560 2.2μ

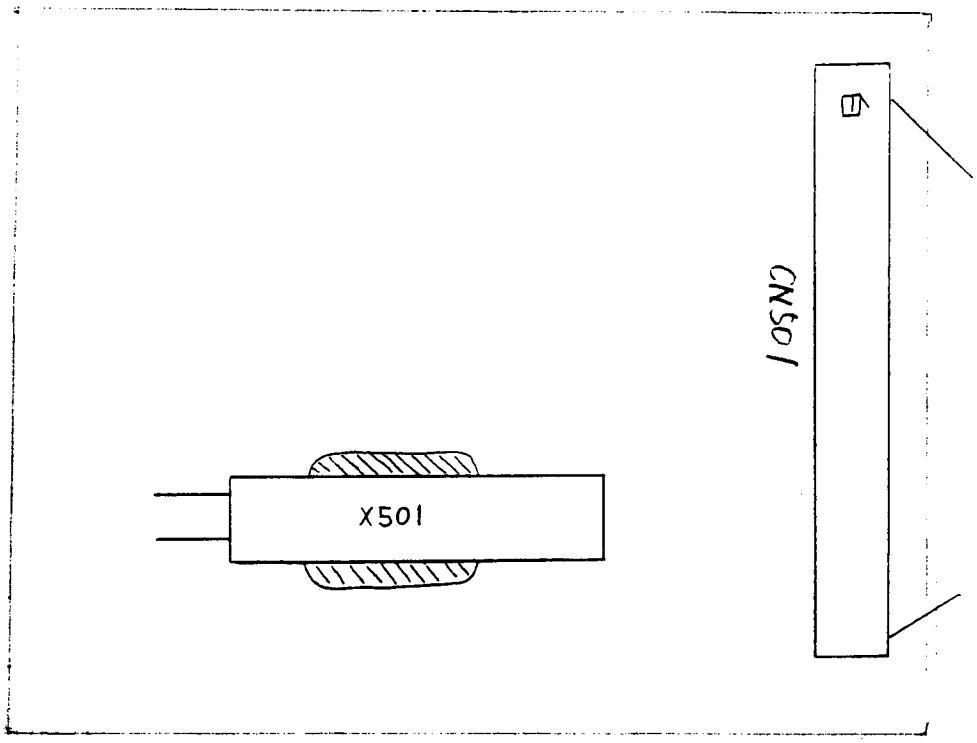
CN501
X501

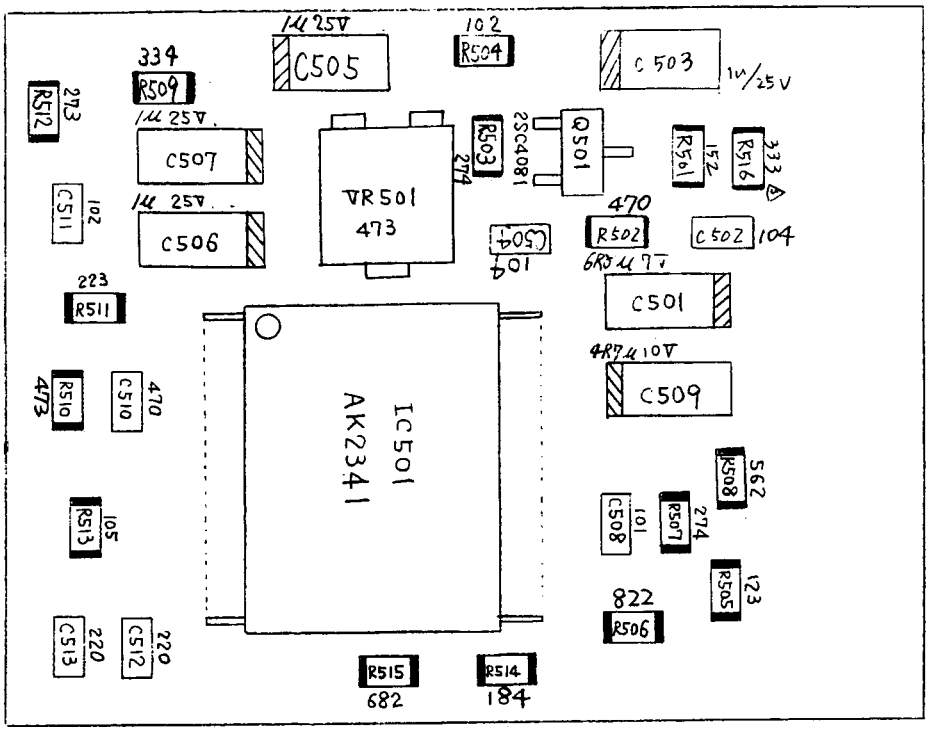
C505
R504
C503
R509
R512
C507
R503
Q501
2SC4081
R516
VR501
473
C506
C511
R502
C502
C501
R511
IC501
AK2341
C509
R510
C510
R508
R513
C508
R507
R505
822
R506
C513
C512
R515
R514
682
184

CTCSS unit

FILTER Unit (VALUE)

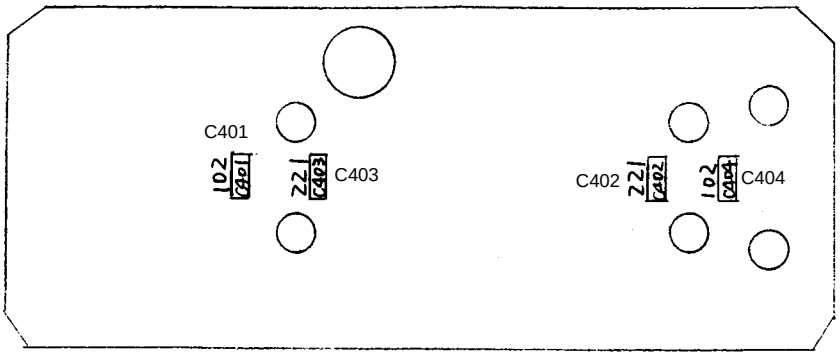

(REFERENCE)

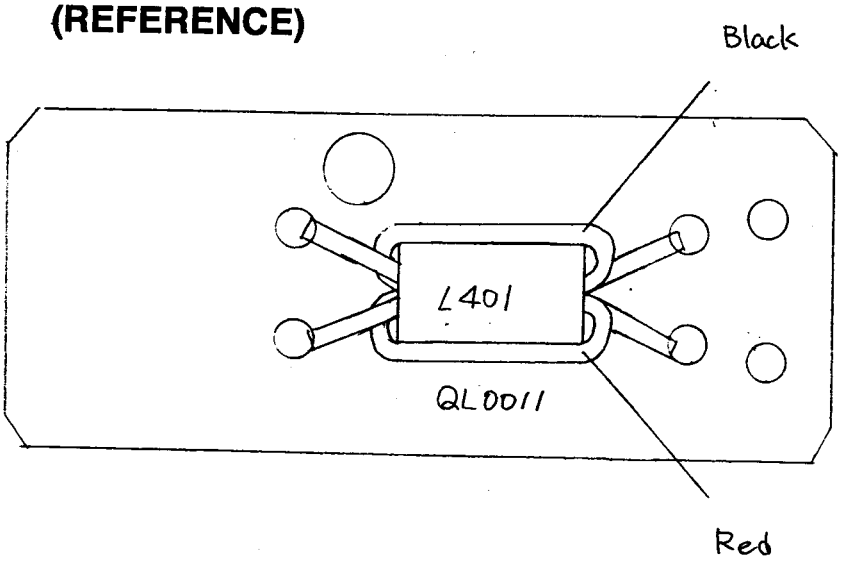

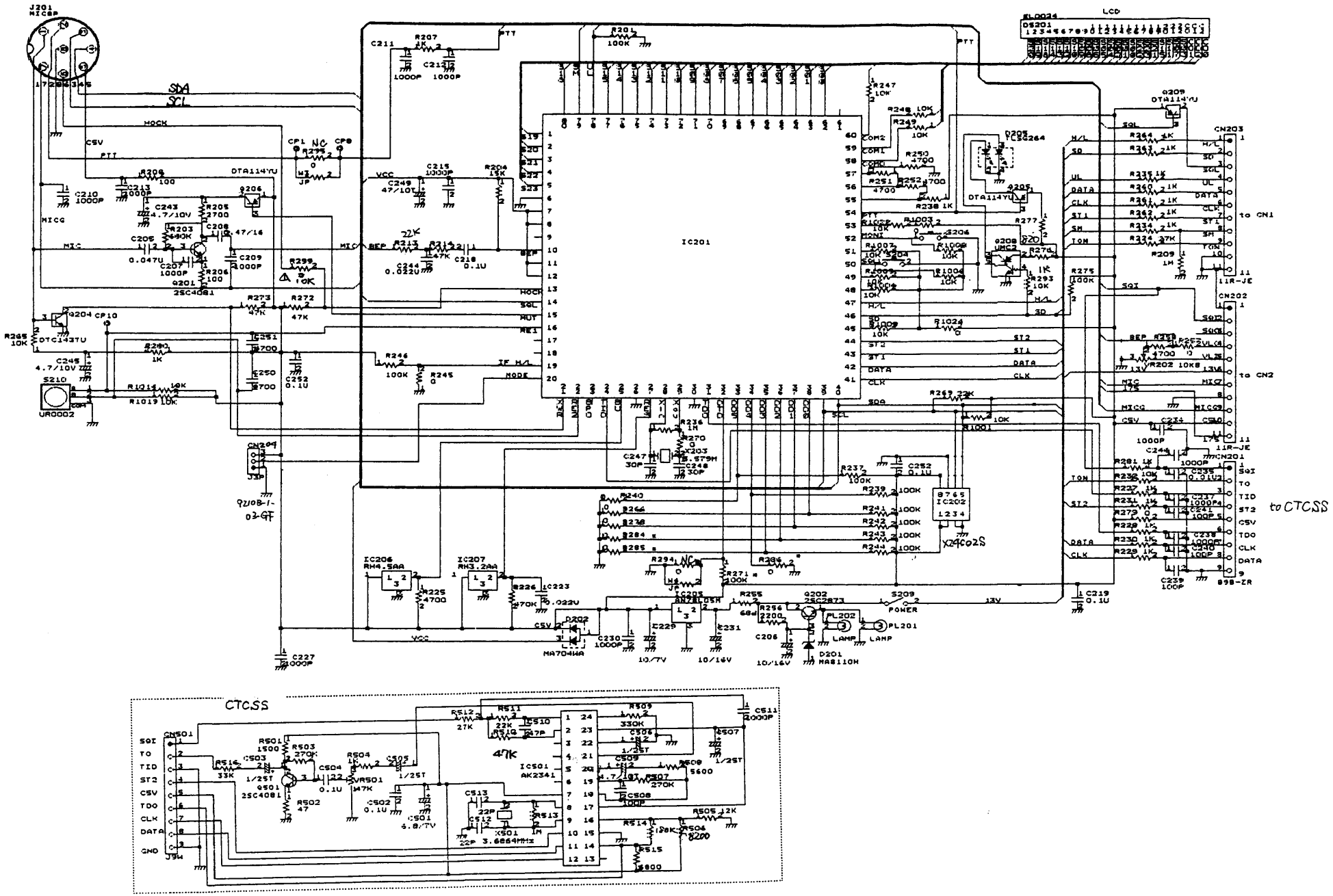
J201
MICSP
SDA
SCL
MOCK
CSV
PTT
IC201
LCD
DS201
CN203
CN202
CN201
to CN1
to CN2
to CTCSS
IC202
X24C02S
IC206
RH4.5AA
IC207
RH3.2AA
IC205
AN78L05M
POWER
LAMP
LAMP
MA704WA
MA8110H
CTCSS
IC501
AK2341
3.6864MHz
GND

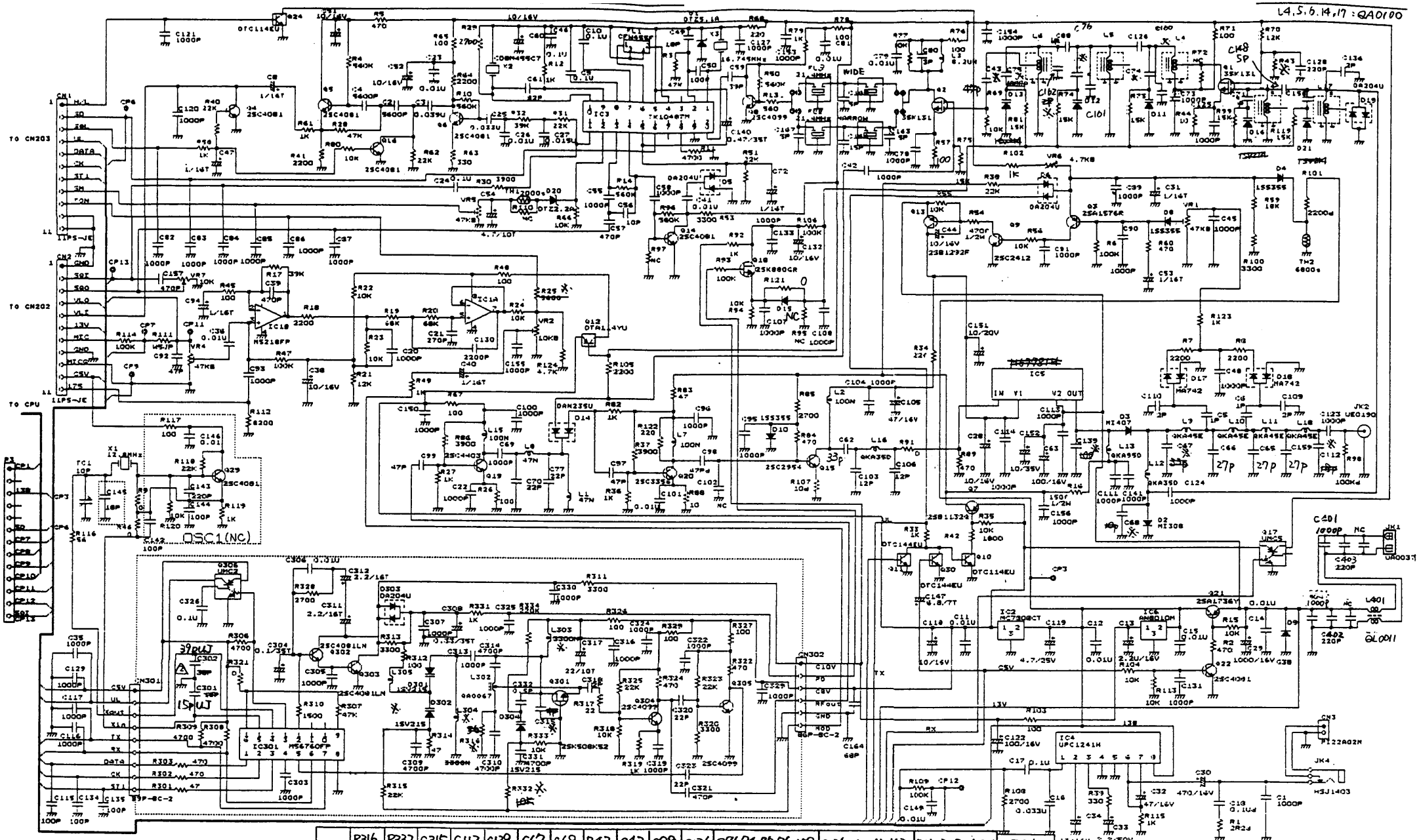

	R316	R332	C315	C112	C139	C67	C68	R43	C43	C88	C126	C71.74.75.76.158	C136.160.161.162	D11.12.13.16.21	IC5
TE2	56	10K	1p	18p	10p	33p	10p	27k	47p	2p	2p	1000p	2p	1SV214	M67781H
TE1	100	8.2K	3p	22p	12p	47p	22p	39k	33p	1.5p	1.5p	56p	NC	1SV215	M67781L

	R25	L303	L304	L305
TE2	4.7K	2.2μ	1.2μ	2.2μ
TE1	5.6K	3.3μ	3.3μ	3.3μ

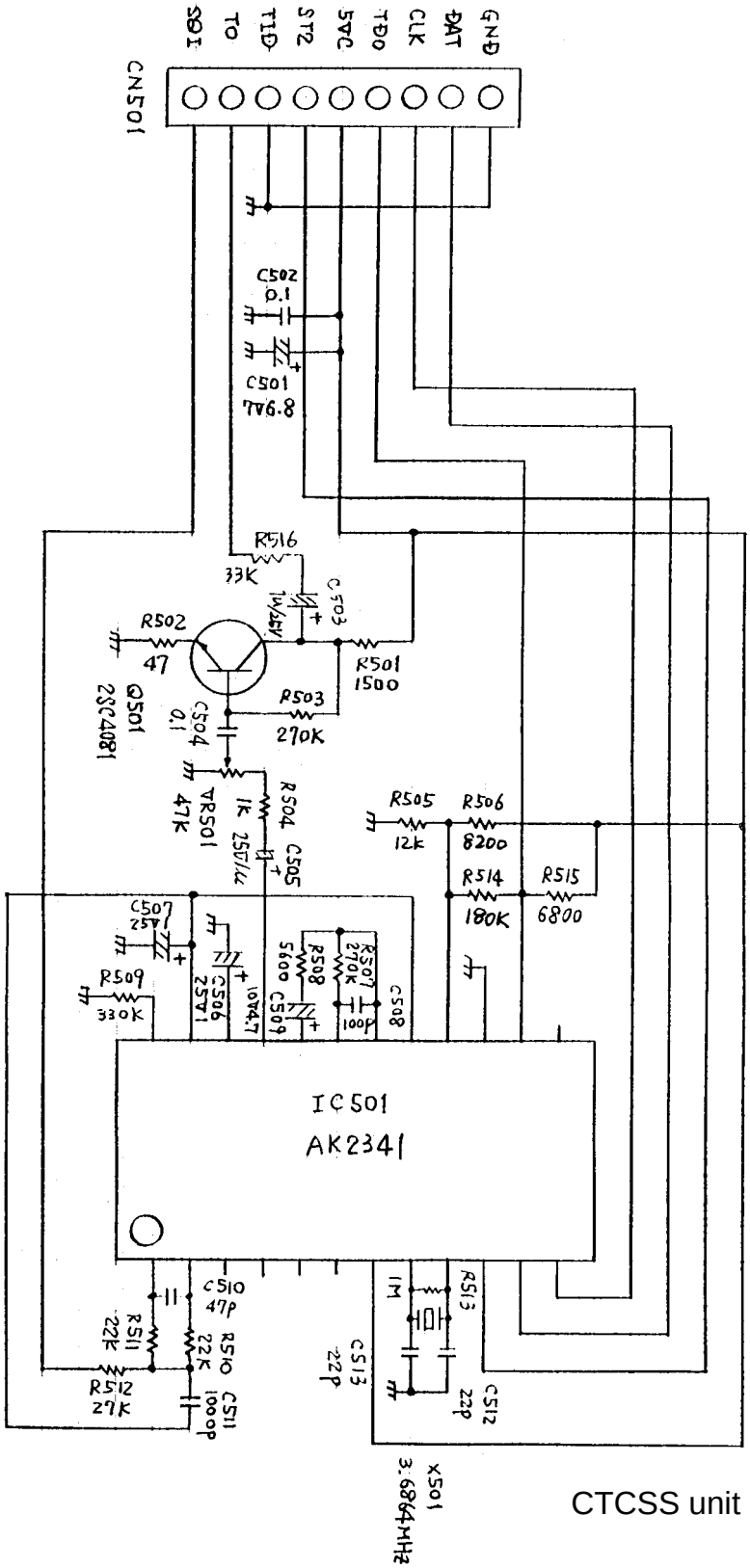
CN501
SQI
TO
TID
ST2
SAC
TDO
CLK
DAT
GND
C502 0.1
C501 4V6.8
R516 33K
C503 1u/25V
R502 47
Q501 2SC4081
R501 1500
R503 270K
C504 0.1
VR501 47K
R504 1k
C505 25V/47
R505 12k
R506 8200
R514 180K
R515 6800
C507 25V
R509 330K
C506 25V47
C509 1000P
R508 5600
R507 270K
100P
C508
IC501
AK2341
C510 47P
R511 22K
R510 22K
R512 27K
C511 1000P
C513 22P
1M
R513
C512 22P
X501
3.6864MHz
CTCSS unit

BLOCK DIAGRAM

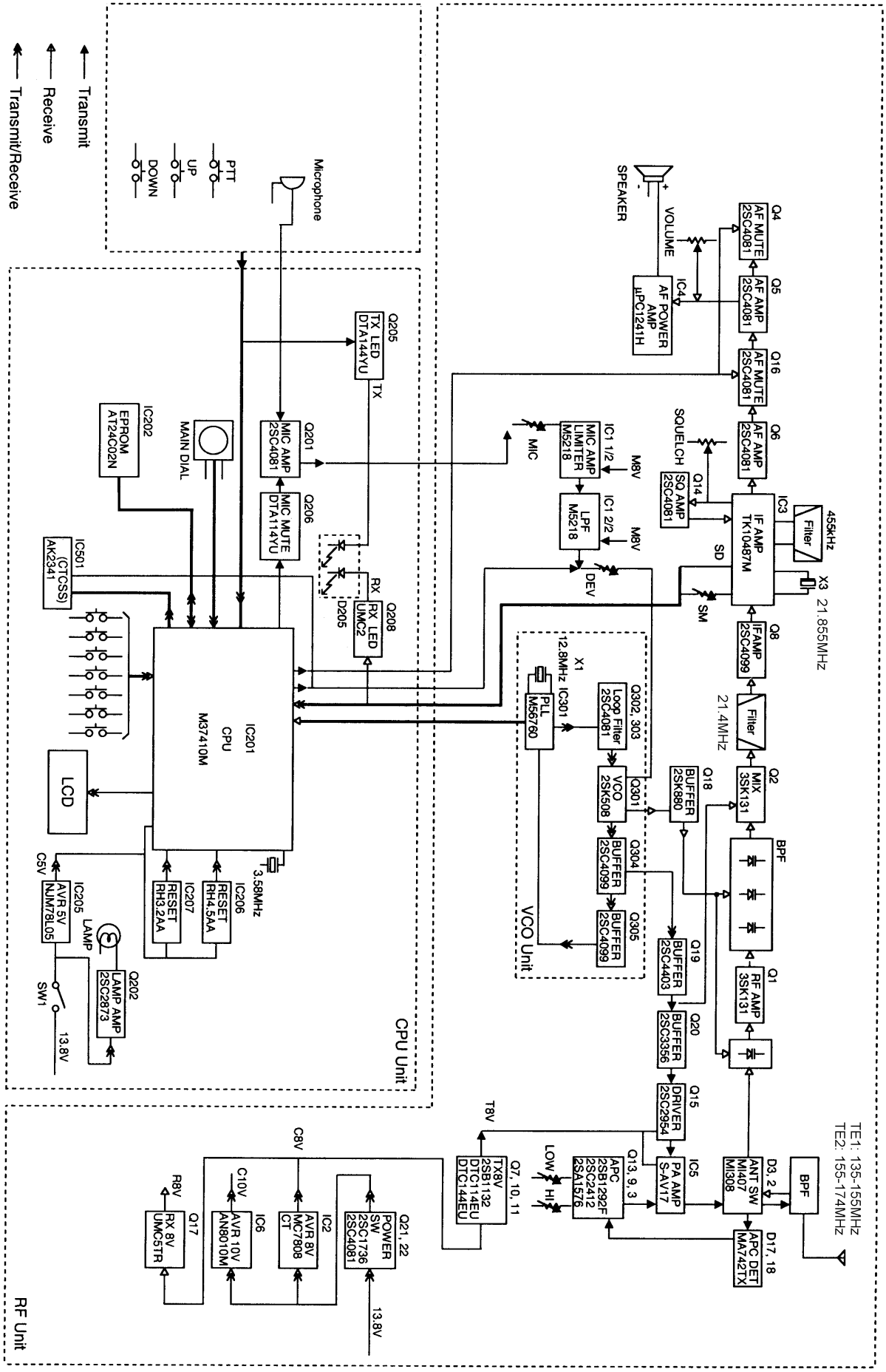
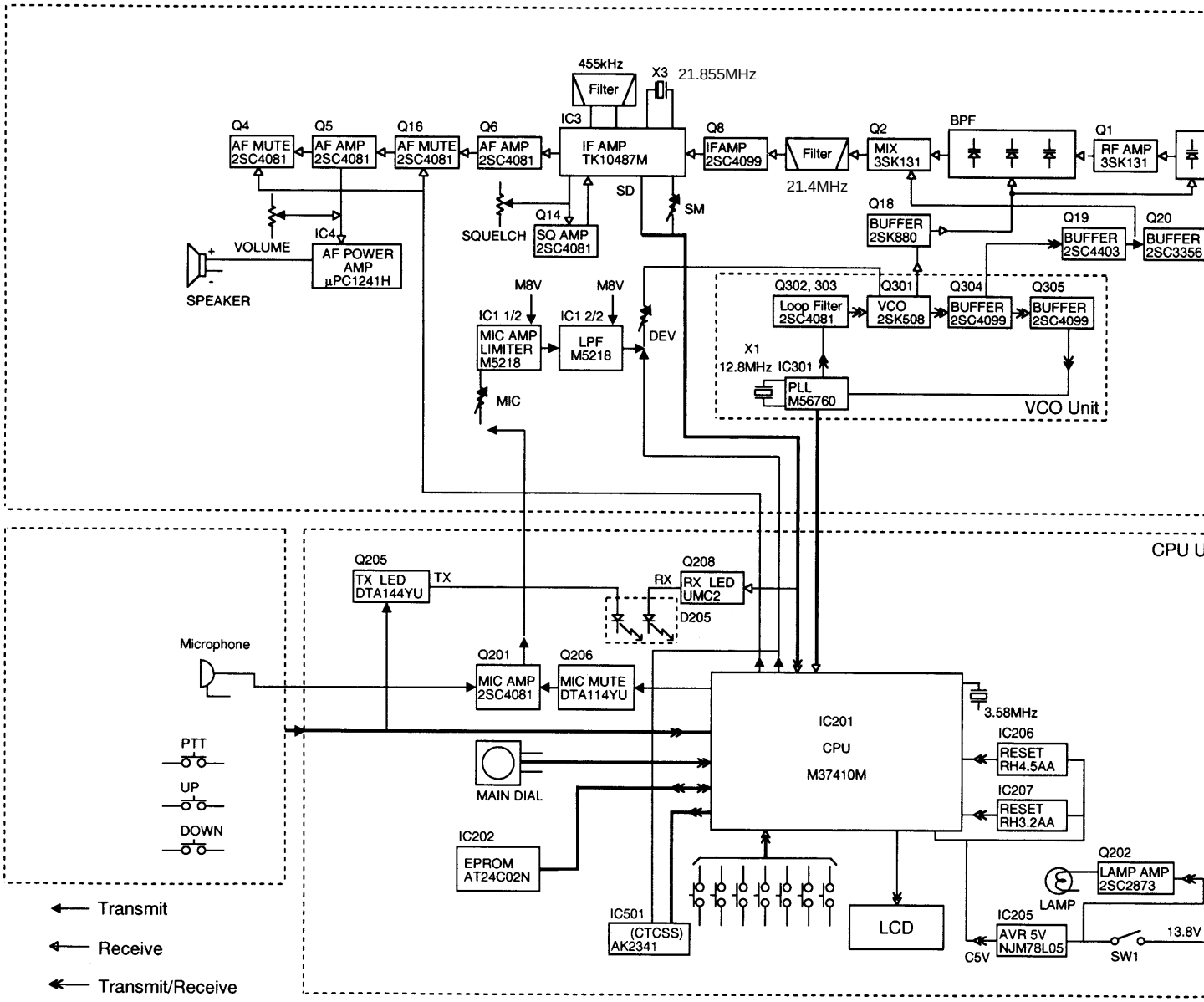
BLOCK DIAGRAM