Required Test Equipment

The following test equipment (and thorough familiarity with its correct use) is necessary for complete realignment. Correction of problems caused by misalignment resulting from use of improper test equipment is not covered under the warranty policy. While most steps do not require all of the equipment listed, the interactions of some adjustments may require that more complex adjustments be performed afterwards. Do not attempt to perform only a single step unless it is clearly isolated electrically from all other steps. Have all test equipment ready before beginning, and follow all of the steps in a section in the order presented.

1. RF Signal Generator with calibrated output level at 1300 MHz
2. Deviation Meter (linear detector)
3. AF Millivoltmeter
4. SINAD Meter
5. Regulated DC Power Supply adjustable from 3 to 15 DC, 1A
6. Frequency Counter: >0.1 ppm accuracy at 1300 MHz
7. AF Signal Generator
8. DC Voltmeter: high impedance
9. DC Ammeter
10. 8 Ω AF Dummy Load
11. Spectrum Analyzer

Alignment Preparation & Precautions

Correct alignment requires that the ambient temperature be the same as that of the receiver and test equipment, and that this temperature be held constant between 20° and 30° C (68° ~ 86° F). When the receiver is brought into the shop from hot or cold air it should be allowed some time for thermal equalization with the environment before alignment. If possible, alignments should be made with oscillator shields and circuit boards firmly affixed in place. Also, the test equipment must be thoroughly warmed up before beginning.

Note: Signal levels in dB referred to in this procedure are based on 0 dBμ = 0.5 μV(closed circuit).

Test Setup

Set up the test equipment as shown below for receiver alignment.

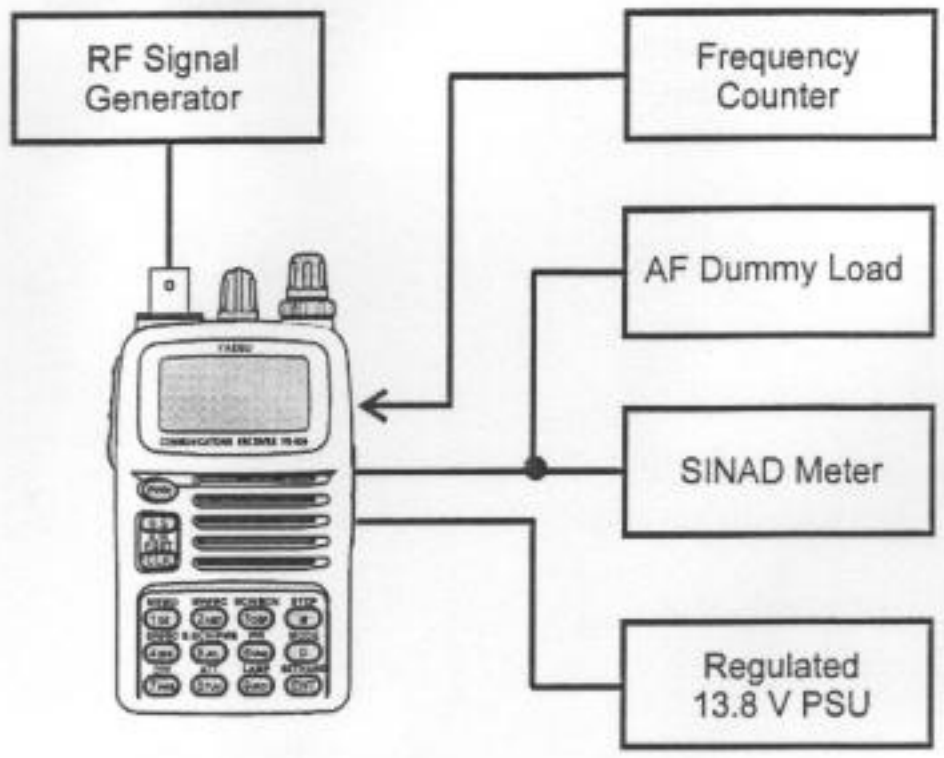

1st Local Frequency

- ❒ Set the VR-500 to 100.050 MHz, NFM mode.
- ❒ Connect the RF probe of the Frequency Counter to **TP3**, and adjust **C620** for a reading 529.15 MHz (±200 Hz) on the Frequency Counter.

3rd Local Frequency

- ❒ Set the VR-500 to 100.000 MHz, LSB mode.
- ❒ Insert the RF probe of the Frequency Counter into the nest at the left side of the chassis, as shown below.

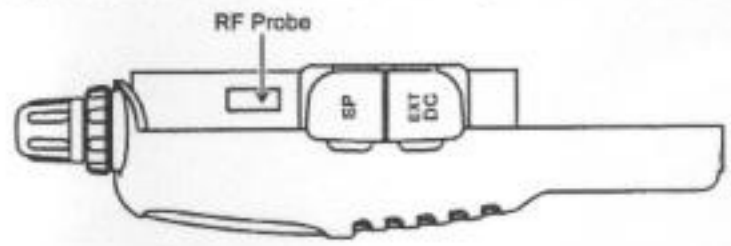

- ❒ Adjust **R303** for a reading 10.2465 MHz (±100 Hz) on the Frequency Counter.

BFO 1

- ❒ Set the VR-500 to 10.050 MHz, LSB mode.
- ❒ Connect the RF Signal Generator to the Antenna jack.
- ❒ Inject a 100.050 MHz 10 dBμ signal from the RF Signal Generator, and adjust **R358** to the point where the AF output level is minimized.

BFO 2

- ❒ Set the VR-500 to 10.050 MHz, USB mode.
- ❒ Connect the RF Signal Generator to the Antenna jack.
- ❒ Inject a 100.050 MHz, 10 dBμ signal from the RF Signal Generator, and adjust **R357** to the point where the AF output level is minimized.

Alignment

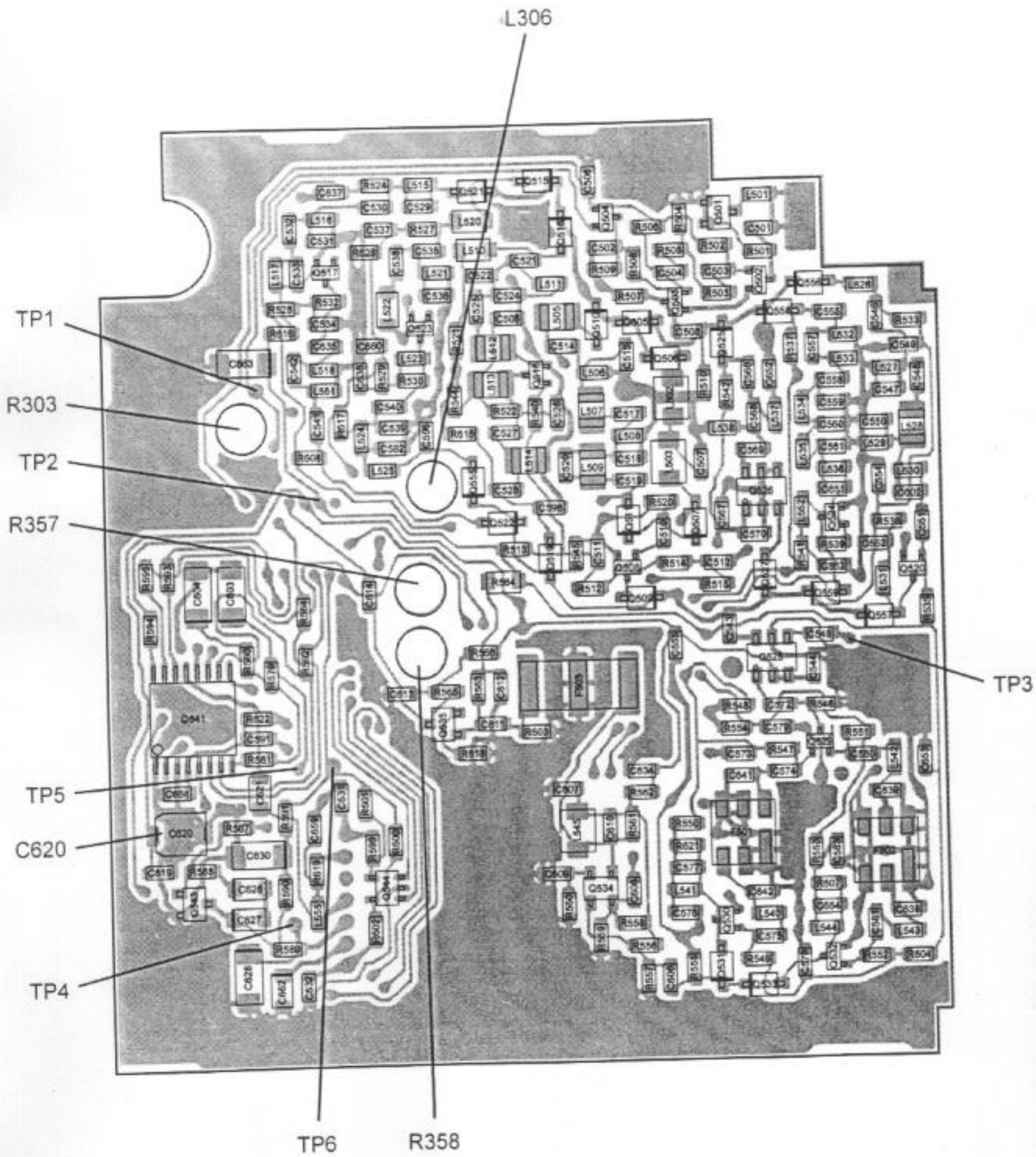

AF NFM Detector Coil

- ❒ Set the VR-500 to 100.050 MHz, NFM mode.
- ❒ Connect the RF Signal Generator to the Antenna jack.
- ❒ Inject a 100.050 MHz, 60 dBμ (1 kHz tone @ ±3.5 kHz deviation) signal from the RF Signal Generator, and adjust **L306** to the point where the AF output signal has minimum distortion.

RF Voltage

- ❒ Connect the DC voltmeter to **TP1**, and confirm a DC voltmeter reading of 2.9 ~ 3.2 V.
- ❒ Connect the DC voltmeter to **TP2**, and confirm a DC voltmeter reading of 2.7 ~ 3.0 V.
- ❒ Connect the DC voltmeter to **TP6**, and confirm a DC voltmeter reading of 9.7 ~ 10.7 V.

1st VCO VCV

- ❒ Connect the DC voltmeter to **TP4**, and referring to table below, tune the VR-500 to each frequency listed. Then confirm that the correct voltage is present.

Frequency	VCV Voltage
620.000 MHz	1.4 ~ 2.3 V
668.350 MHz	2.5 ~ 4.2 V
668.450 MHz	0.8 ~ 1.6 V
778.350 MHz	3.0 ~ 5.0 V
778.450 MHz	0.6 ~ 1.3 V
280.800 MHz	6.4 ~ 8.7 V
280.900 MHz	0.7 ~ 1.4 V
1299.500 MHz	3.2 ~ 3.9 V

Idle Current

- ❒ Connect the 3.0 VDC power source, via the DC ammeter, to the battery terminal (not the EXT DC jack) on the VR-500.
- ❒ Set the **SQL** knob fully clockwise, and set the radio to the NFM mode.
- ❒ Disable the Battery Saver via MENU #5 (Save).
- ❒ Referring to table below, tune the VR-500 to each frequency listed, then confirm that the correct Idle Current is present.

Frequency	Idle Current
1.050 MHz	less than 60 mA
10.050 MHz	less than 60 mA
100.050 MHz	less than 60 mA
150.050 MHz	less than 60 mA
200.050 MHz	less than 60 mA
300.050 MHz	less than 60 mA
400.050 MHz	less than 60 mA
600.050 MHz	less than 60 mA
1299.950 MHz	less than 65 mA

2nd VCO VCV

- ❒ Connect the DC voltmeter to **TP5**, and referring to table below, tune the VR-500 to each frequency listed. Then confirm that the correct voltage is present.

Frequency	VCV Voltage
320.000 MHz	0.7 ~ 1.4 V
1000.000 MHz	1.4 ~ 2.1 V

Sensitivity

- ❒ Connect the RF Signal Generator to the Antenna jack.
- ❒ Set the VR-500 to NFM mode.
- ❒ Referring to table below, tune the RF Signal Generator and VR-500 to each frequency listed, then confirm that at least12 dB SINAD is observed at the level shown.

Frequency	12 dB SINAD
30.050 MHz	Better than -3dBu
51.050 MHz	Better than -3dBu
107.950 MHz	Better than -3dBu
137.950 MHz	Better than -3dBu
145.950 MHz	Better than -2dBu
159.950 MHz	Better than 0dBu
160.050 MHz	Better than -3dBu
180.050 MHz	Better than -3dBu
230.050 MHz	Better than -3dBu
250.050 MHz	Better than -3dBu
369.950 MHz	Better than +6dBu
459.950 MHz	Better than -1dBu
469.950 MHz	Better than 0dBu
779.950 MHz	Better than +8dBu
835.050 MHz	Better than +5dBu
859.950 MHz	Better than +5dBu
1299.950 MHz	Better than +6dBu

- ❒ Set the VR-500 to WFM mode.
- ❒ Referring to the table below, tune the RF Signal Generator and VR-500 to each frequency listed, then confirm that at least12 dB SINAD is observed at the level shown.

Frequency	12 dB SINAD
107.950 MHz	Better than +8dBu
224.950 MHz	Better than +9dBu
459.950 MHz	Better than +12dBu
619.950 MHz	Better than +15dBu
769.950 MHz	Better than +25dBu
1259.950 MHz	Better than +20dBu

Alignment

- ❒ Set the VR-500 to the AM mode.
- ❒ Referring to the table below, tune the RF Signal Generator and VR-500 to each frequency listed, then confirm at least10 dB S/N is observed at the frequency shown.

Frequency	10 dB S/N
0.285 MHz	Better than +20dBu
0.525 MHz	Better than +12dBu
2.050 MHz	Better than +15dBu
5.050 MHz	Better than +8dBu
49.950 MHz	Better than +7dBu
109.950 MHz	Better than +8dBu
138.050 MHz	Better than +7dBu
225.050 MHz	Better than +7dBu

- ❒ Set the VR-500 to the LSB mode.
- ❒ Referring to table below, tune the RF Signal Generator and VR-500 to each frequency listed, then confirm that at least10 dB S/N is observed.

Frequency	10 dB S/N
2.050 MHz	Better than +6dBu
28.950 MHz	Better than -2dBu

- ❒ Set the VR-500 to the USB mode.
- ❒ Referring to table below, tune the RF Signal Generator and VR-500 to each frequency listed, then confirm that at least10 dB S/N is observed.

Frequency	10 dB S/N
2.050 MHz	Better than +6dBu
28.950 MHz	Better than -2dBu

- ❒ Set the VR-500 to the CW mode.
- ❒ Referring to table below, tune the RF Signal Generator and VR-500 to each frequency listed, then confirm that at least10 dB S/N is observed.

Frequency	10 dB S/N
2.050 MHz	Better than +6dBu
28.950 MHz	Better than -2dBu

S-meter & Squelch

Presetting (used in steps to follow)

- ❒ Disable the ATT function, if activated.
- ❒ Disable the Battery Saver, OFF Timer, and RF Squelch via MENU #5 (Save), MENU #6 (OFF Timer), and MENU #19 (RF Squelch) respectively, if these functions are activated.
- ❒ Set MENU # 1 (Receive Mode) to "MANUAL."
- ❒ Set these frequencies into the ~~BMS memories~~: Smartsearch set up
  Low band edge frequency (1:L): 1250.3750 MHz
  Start Frequency (2:S): 123.1250 MHz
  High Band edge Frequency (3:U): 448.2500 MHz
- ❒ Presetting is now completed; the "Battery" icon will blink.

NFM S-meter

- ❒ Preset the VR-500 via the previous steps.
- ❒ Set the VR-500 to 100.050 MHz, NFM mode.
- ❒ Connect the RF Signal Generator to the Antenna jack.
- ❒ Press the [9] key while pressing the [FUNC] key to activate the S-meter adjustment process ("S Meter Set" will appear). -87dbm 10µV
- ❒ Inject a 100.050 MHz, 20 dBµ (1 kHz tone @ ±3.5 kHz deviation) signal from the RF Signal Generator. Press the [1] key while pressing the [FUNC] key, then press the [B.S] key until the beep is heard; this saves the new setting. This routine is the S-meter "Full-Scale" adjustment. —108dbm
- ❒ Reduce the RF Signal Generator output level to –1 dBµ. Press the [2] key while pressing the [FUNC] key, and then press the [B.S] key until the beep is heard; this saves the new setting. This routine is the S-meter "S-2" adjustment. 0.89µ
- ❒ Press the [CLR] key to return to normal operation.
- ❒ Increase the RF Signal Generator output level so that the VR-500 S-meter deflection is "Full-Scale," and confirm that the RF Signal Generator output level is 20 dBµ ±4 dB. 87db 10µ
- ❒ Reduce the RF Signal Generator output level so that the VR-500 S-meter deflection is just "S-2," and confirm that the RF Signal Generator output level is –1 dBµ ±4 dB.

WFM S-meter

- ❒ Preset the VR-500 via the procedure described above.
- ❒ Set the VR-500 to 100.050 MHz, WFM mode.
- ❒ Connect the RF Signal Generator to the Antenna jack.
- ❒ Press the [9] key while pressing the [FUNC] key to activate the S-meter adjustment process ("S Meter Set" will appear). -67dbm 100µV
- ❒ Inject a 100.050 MHz, 40 dBµ (1 kHz tone @ ±75 kHz deviation) signal from the RF Signal Generator. Press the [1] key while pressing the [FUNC] key, and then press the [B.S] key until the beep is heard; this saves the new setting. This routine is the S-meter "Full-Scale" adjustment.
- ❒ Reduce the RF Signal Generator output level to 10 dBµ. Press the [2] key while pressing the [FUNC] key, then press the [B.S] key. This routine is the S-meter "S-2" adjustment.
- ❒ Press the [CLR] key to return to normal operation.
- ❒ Increase the RF Signal Generator output level so that the VR-500 S-meter deflection is "Full-Scale," and confirm that the RF Signal Generator output level is 40 dBµ ±4 dB. 100µV -67 dbm

- ❒ Reduce the RF Signal Generator output level so that the VR-500 S-meter deflection is just "S-2," and confirm that the RF Signal Generator output level is 10 dBμ ±4 dB. -97dbm 3.162μv

AM S-meter

- ❒ Preset the VR-500 per the procedure described previously.
- ❒ Set the VR-500 to 1.050 MHz, AM mode.
- ❒ Connect the RF Signal Generator to the Antenna jack.
- ❒ Press the [9] key while pressing the [FUNC] key to activate the S-meter adjustment process ("S Meter Set" will appear). -82dbm 17.78μv
- ❒ Inject a 1.050 MHz, 25 dBμ (1 kHz tone @ 30% modulation) signal from the RF Signal Generator. Press the [1] key while pressing the [FUNC] key, and then press the [B.S] key until the beep is heard; this saves the new setting. This routine is the S-meter "Full-Scale" adjustment. -109dbm 0.794μv
- ❒ Reduce the RF Signal Generator output level to –2 dBμ; press the [2] key while pressing the [FUNC] key, then press the [B.S] key. This routine is the S-meter "S-2" adjustment.
- ❒ Press the [CLR] key to return to normal operation.
- ❒ Increase the RF Signal Generator output level so that the VR-500 S-meter deflection is "Full-Scale," and confirm that the RF Signal Generator output level is 25 dBμ ±4 dB. -82dbm 17.78μv
- ❒ Reduce the RF Signal Generator output level so that the VR-500 S-meter deflection is just "S-2," and confirm that the RF Signal Generator output level is –2 dBμ ±4 dB. -109dbm 0.794μv

SSB S-meter

- ❒ Preset the VR-500 using the procedure described previously.
- ❒ Set the VR-500 to 10.050 MHz, LSB mode.
- ❒ Connect the RF Signal Generator to the Antenna jack.
- ❒ Press the [9] key while pressing the [FUNC] key to activate the S-meter adjustment process ("S Meter Set" will appear). -77dbm 31.62μv
- ❒ Inject a 10.050 MHz, 30 dBμ signal from the RF Signal Generator. Press the [1] key while pressing the [FUNC] key, and then press the [B.S] key to until the beep is heard; this saves the new setting. This routine is the S-meter "Full-Scale" adjustment. -109dbm 0.794μv
- ❒ Reduce the RF Signal Generator output level to –2 dBμ, then press the [2] key while pressing the [FUNC] key. This routine is the S-meter "S-2" adjustment.
- ❒ Press the [CLR] key to return to normal operation.
- ❒ Increase the RF Signal Generator output level so that the VR-500 S-meter deflection is "Full-Scale," and confirm that the RF Signal Generator output level is 30 dBμ ±4 dB.
- ❒ Reduce the RF Signal Generator output level so that the VR-500 S-meter deflection is just "S-2," and confirm that the RF Signal Generator output level is –2 dBμ ±4 dB.

NFM Squelch

- ❒ Preset the VR-500 using the procedure described previously.
- ❒ Set the VR-500 to 100.050 MHz, NFM mode.
- ❒ Connect the RF Signal Generator to the Antenna jack.
- ❒ Press the [8] key while pressing the [FUNC] key to activate the S-meter adjustment process ("Squelch Set" will appear). 107dbm 1μv
- ❒ Inject a 100.050 MHz, 0 dBμ (1 kHz tone @ ±3.5 kHz deviation) signal from the RF Signal Generator. Press the [2] key while pressing the [FUNC] key, and then press the [B.S] key; this routine is the Squelch "Tight" adjustment.
- ❒ Reduce the RF Signal Generator output level to –15 dBμ. Press the [1] key while pressing the [FUNC] key, and then press the [B.S] key; this routine is the Squelch "threshold" adjustment.
- ❒ Press the [3] key while pressing the [FUNC] key, then press [BS] key until the beep is heard; this saves the new Squelch setting.
- ❒ Press the [CLR] key to return to normal operation.
- ❒ Turn off the RF Signal Generator and set the **SQL** knob so that the background noise is just silenced.
- ❒ Turn on the RF Signal Generator and increase the RF Signal Generator output level so that the VR-500 Squelch is just opened; confirm that the RF Signal Generator output level is –15 dBμ ±4 dB. -122dbm 0.177μv
- ❒ Set the **SQL** knob fully clockwise, then increase the RF Signal Generator output level so that the VR-500 Squelch is just opened; confirm that the RF Signal Generator output level is 0 dBμ ±4 dB. -107dbm 1μv

WFM Squelch

- ❒ Preset the VR-500 using the procedure described previously.
- ❒ Set the VR-500 to 100.050 MHz, WFM mode.
- ❒ Connect the RF Signal Generator to the Antenna jack.
- ❒ Press the [8] key while pressing the [FUNC] key to activate the S-meter adjustment process ("Squelch Set" will appear).
- ❒ Inject a 100.050 MHz, 20 dBμ (1 kHz tone @ ±3.5 kHz

deviation) signal from the RF Signal Generator. Press the [2] key while pressing the [FUNC] key, and then press the [B.S] key; this routine is the Squelch "Tight" adjustment.

- ❒ Reduce the RF Signal Generator output level to –3 dBμ. Press the [1] key while pressing the [FUNC] key, and then press the [B.S] key; this routine is the Squelch "Threshold" adjustment.
- ❒ Press the [3] key while pressing the [FUNC] key, then press the [BS] key untilthe beep is heard; this saves the new Squelch setting.
- ❒ Press the [CLR] key to return to normal operation.
- ❒ Turn off the RF Signal Generator and set the **SQL** knob so that the background noise is just silenced.
- ❒ Turn on the RF Signal Generator and increase the RF Signal Generator output level so that the VR-500 Squelch is just opened; confirm that the RF Signal Generator output level is 20 dBμ ±4 dB.
- ❒ Set the **SQL** knob fully clockwise, then increase the RF Signal Generator output level so that the VR-500 Squelch is just opened; confirm that the RF Signal Generator output level is –3 dBμ ±4 dB.

AM Squelch

- ❒ Preset the VR-500 per the procedure described previously.
- ❒ Set the VR-500 to 1.050 MHz, AM mode.
- ❒ Connect the RF Signal Generator to the Antenna jack.
- ❒ Press the [8] key while pressing the [FUNC] key to activate the S-meter adjustment process ("Squelch Set" will appear).
- ❒ Inject a 1.050 MHz, 0 dBμ (1 kHz tone @ 30% modulation) signal from the RF Signal Generator. Press the [2] key while pressing the [FUNC] key, and then press the [B.S] key; this routine is the Squelch "Tight" adjustment.
- ❒ Reduce the RF Signal Generator output level to –15 dBμ. Press the [1] key while pressing the [FUNC] key, and then press the [B.S] key; this routine is the Squelch "Threshold" adjustment.
- ❒ Press the [3] key while pressing the [FUNC] key, then press [BS] key until the beep is heard; this saves the new Squelch setting.
- ❒ Press the [CLR] key to return to normal operation.
- ❒ Turn off the RF Signal Generator and set the **SQL** knob so that the background noise is just silenced.
- ❒ Turn on the RF Signal Generator and increase the RF Signal Generator output level so that the VR-500 Squelch is just opened; confirm that the RF Signal Generator output level is 0 dBμ ±4 dB.
- ❒ Set the **SQL** knob fully clockwise, then increase the RF Signal Generator output level so that the VR-500 Squelch is just opened; confirm that the RF Signal Generator output level is –15 dBμ ±4 dB.

LSB Squelch

- ❒ Preset the VR-500 per the procedure described previously.
- ❒ Set the VR-500 to 10.050 MHz, LSB mode.
- ❒ Connect the RF Signal Generator to the Antenna jack.
- ❒ Press the [8] key while pressing the [FUNC] key to activate the S-meter adjustment process ("Squelch Set" will appear).
- ❒ Inject a 10.050 MHz, –1 dBμ signal from the RF Signal Generator. Press the [2] key while pressing the [FUNC] key, and then press the [B.S] key; this routine is the Squelch "Tight" adjustment.
- ❒ Reduce the RF Signal Generator output level to –14 dBμ. Press the [1] key while pressing the [FUNC] key, and then press the [B.S] key; this routine is the Squelch "Threshold" adjustment.
- ❒ Press the [3] key while pressing the [FUNC] key, then press [BS] key until the beep is heard; this saves the new Squelch setting.
- ❒ Press the [CLR] key to return to normal operation.
- ❒ Turn off the RF Signal Generator and set the **SQL** knob so that the background noise is just silenced.
- ❒ Turn on the RF Signal Generator and increase the RF Signal Generator output level so that the VR-500 Squelch is just opened; confirm that the RF Signal Generator output level is –1 dBμ ±4 dB.
- ❒ Set the **SQL** knob fully clockwise, then increase the RF Signal Generator output level so that the VR-500 Squelch is just opened; confirm that the RF Signal Generator output level is –14 dBμ ±4 dB.

AF Output

- ❒ Connect the RF Signal Generator to the Antenna jack, and connect the DC volt meter and 8 Ω dummy load to the **SP** jack.
- ❒ Connect the 13.8 VDC power source to the **EXT DC** jack.
- ❒ Set the VR-500 to 100.050 MHz NFM mode, and rotate the **VOL** knob fully clockwise.
- ❒ Inject a 60 dBμ from the RF Signal Generator; confirm that the DC voltmeter reading is more than 1.10V (150 mW with 8 Ω load).
- ❒ Disconnect the 13.8 VDC power source from the **EXT DC** jack, then connect the 3.0 VDC power source to the Battery terminal; confirm that the DC voltmeter

reading is more than 0.85 V (90 mW with 8 Ω load).

- ❒ Repeat the above steps in the WFM, AM, LSB, USB, and CW modes, and confirm that the AF output level is more than 150 mW @ 13.8 VDC and 90 mW @ 3.0 VDC.

ATT

- ❒ Set the VR-500 to 100.050 MHz, NFM mode.
- ❒ Connect the RF Signal Generator to the Antenna jack.
- ❒ Inject a 100.050 MHz, NFM signal from the RF Signal Generator; confirm that the 12 dB SINAD difference between the ATT "ON" and "OFF" conditions is 15 ~ 25 dB.